The NEFF *APPLIANCES RANGE 2024*

Introduction to NEFF

Cook. Create. Inspire

At NEFF we believe that the kitchen is the heart of every home. A place to eat, meet and get creative with your cooking. With an extensive range of innovative appliances, we're constantly working to meet the demands of every lifestyle. From our unique Slide&Hide® disappearing oven door, to our extensive range of steam and pyrolytic ovens, hobs and hoods, these appliances expertly installed create the perfect NEFF Kitchen.

Contents

OVENS	**4-51**
Introduction To Ovens	4-7
Steam Cooking Explained	8-9
Key Functions Guide	10-11
Fascia Display Types	12-13
Home Connect	14-15
N90 and N70 Range of Appliances	16-17
N50 Range of Appliances	18-19
Seamless Combination®	20-21
N90/N70 Graphite Grey Appliance List	22
N70 Stainless Steel Appliance List	23
N50 Appliance List	24
Optional Accessories List	25
Product Specification	26-41
Product Line Drawings	42-51
HOBS	**52-87**
Introduction to Hobs	52-53
Your Guide To Hobs	54-55
Guide To Electric Hobs	56-57
Electric Hobs Specification	58-71
Electric Hobs Line Drawings	72-73
Electric Hobs Accessories	74-75
Guide To Gas Hobs	76
Gas Hobs Specification	77-82
Gas Hobs Line Drawings	84-85
Electric Hobs List	86
Gas Hobs List	87
COOKER HOODS	**88-127**
Introduction to Hoods	88-89
Your Guide To Control Types	90
Key Functions Guide	91
Installation Options	92-93
Island Ventilation Solutions	94-95
Island Specification	96-99
Wall Mounted Ventilation Solutions	100-101
Wall Mounted Ventilation Specification	102-107
Integrated Furniture Ventilation Solutions	108
Integrated Furniture Ventilation Specification	109-113
Hoods Appliance List	114-115
Hoods Accessories	116-117
Product Line Drawings	118-127
COOLING	**128-163**
Introduction to Cooling	130-131
Built-In Fridge Freezer Guide	140-141
Built-In Single Fridge Freezer Guide	132-133
Other Styles Guide	134
Key Functions Guide	135
Design Features	136-137
Product Specification	138-153
Product Line Drawings	154-163
DISHWASHERS	**164-177**
Introduction to Dishwashers	164
Dishwasher Solutions	165
Feature Highlights	166
Control Types	167
Key Functions Guide	168-169
Product Specification	170-175
Product Line Drawings	176-177
LAUNDRY	**178-183**
Introduction To Laundry	178
Key Functions Guide	179
Product Specification	180-181
Product Line Drawings	182-183
NEFF CUSTOMER SERVICE	**184-185**
NOTES	**186**

Cook. Create. INSPIRE.

NEFF truly believes that the kitchen is the heart of the home and creating a solution for every cooking style is part of our DNA.

NEFF has a range to suit every cooking style. Our brochure unfolds the key brand attributes of every category.

Slide & Hide® creates kitchen envy with the iconic disappearing door and the additional ranges packed with features and functions can suit all kitchen styles and layouts.

NEFF
cook. create. inspire.

NEFF's iconic SLIDE & HIDE® DOOR

The iconic Slide & Hide®: the first and only fully retracting oven door. Only from NEFF.

What makes our Slide & Hide® ovens so special:

- Wide range of features suited to all cooking styles.
- Seals the food quickly making it ideal for multi-level cooking. A perfect choice for baking and roasting achieving succulent roasts and even bakes.
- The range includes an oven for every cooking style and budget. Designed using a value class to identify each collection.
  - Our N90 range is our most premium range followed by N70 and N50
  - For perfect design alignment the ranges have been curated to be installed vertically or horizontally within their own value class aligning and matching their fascia panels.
- Our Single Slide & Hide® ovens seamlessly integrate into various kitchen designs. They can be combined with other Single ovens side by side or with Compact ovens and warming drawers, both horizontally and vertically, offering versatility in design and cooking solutions.
  - One notable advantage is in an Accessible kitchen, where these appliances offer many benefits. They can be installed at a suitable height, and the retractable door provides full, safe access to the oven cavity.
- Made in Germany in our bespoke NEFF factory.

Steam cooking EXPLAINED

	VARIO STEAM®	INTENSIVE STEAM
WHAT IS IT	Vario Steam® combines conventional hot air cooking functions with Steam. Ducts in the back plate release steam into the oven quickly and evenly adding steam into the oven category. Vario Steam® has 3 levels of steam: • Level 1 (Low) Steam • Level 2 (Medium) Steam • Level 3 (High) Steam	Intensive Steam has all the functions of Vario Steam® combining hot air and steam. It also uses 100% (pure) steam to gently cook a variety of dishes. The Intensive Steam now means that the steam temperature will reach 120˚C – by increasing the temperature it reduces the cooking times for certain foods.
	Both steam approaches can be added to: • Circo Therm® • Top and Bottom Heat • Circo Roasting • Bread Baking Setting	

Intensive Steam (Full Steam)

Increasing the temperature reduces cooking times for produce that cooks more slowly, such as root vegetables, rice dishes and pulses. Cooking these food types more quickly has the added benefit of retaining more vitamins.

Key Benefits

- Saves Time – increasing to 120°C means it can reduce cooking times.
- Healthier Way to cook – more vitamins and nutrients retained due to quicker cooking time.
- Defrost – this programme introduces steam to the cavity to ensure frozen food does not dry out. Temperature range 30-60°C.

Vario Steam® & Steam Boost

The difference between these two features is that with Vario Steam®, once the level of steam intensity is selected, the appliance automatically adds in the steam at selected intervals whereas with Steam Boost the steam is manually added by the user for a 3 minute duration, repeatable for up to another 9 times.

Vario Steam®

Vario Steam® has 3 levels suitable for:

- **Add Level 1 steam for pastries and cakes** - to give an even golden crust, better rise and volume. No soggy cakes here just beautifully moist.
- **Perfect roasted meats can be achieved by adding level 2 steam**, no basting, just a golden crisp skin with tender meat inside. Plus less shrinkage.
- **Add level 3** high steam to Circo Roasting 200°C for easy **roasties**. No part boiling, a touch of olive oil for crisp and fluffy results.

Steam Boost

This feature is primarily for home-baked bread, giving a crisp outside and nice and fluffy on the inside:

- It delivers fast and intensive steam
- Oven is pre-heated
- A bread baking stone can be used
- Once to temperature press the Steam Boost* button to inject 3 mins of steam.
- This can be done up to 10 times during the programme.

* The feature is called Steam Boost but on the appliance fascia this is Steam Jet.

Other Steam Options

Reheat

The reheat function introduces steam during the reheating process so that food will not dry out. This causes the food to taste as if it is freshly cooked. Even crispy food like bread will regain their crispy crust. Temperature range 80-180°C.

Dough Proving

Bread will prove quicker using this function than at room temperature. Temperature range 30-50°C.

Key Functions Guide

Cooking Functions

CIRCO THERM®
Circo Therm® evenly distributes the hot air throughout the oven, allowing for consistent cooking results on multiple trays simultaneously.

CIRCO THERM® GENTLE
Circo Therm® Gentle is designed for delicate cooking tasks that require gentle heat and precise temperature control. Operating at a lower temperature, it is perfect for baking delicate pastries, or slow cooking.

CIRCO ROASTING
Circo Roasting is the ideal function for cooking meat and poultry. The circulating hot air helps to sear the exterior of the meat quickly, locking in juices and flavour while creating a crispy, golden-brown crust. Meanwhile, the interior remains moist and tender.

CIRCO THERM® INTENSIVE
CUses a combination of Circo Therm® and bottom heat, ideal for foods that need a crispy underside like pizzas or specialty breads. It can also be used for one stage pastry such as lemon meringue pie, eliminating the need for blind baking.

TOP/BOTTOM HEAT
Providing conventional cooking heat sources at the top and bottom of the oven. Heat travels to the centre of the oven by natural conduction.
Ideal for baking pastries and scones.

BOTTOM HEAT
Providing heat from the bottom of the oven, this method is ideal for pizza bases and pastry cases to create a crispy underside or for bain marie and casseroles.

CENTRE SURFACE GRILL
When the Centre Surface Grill function is activated, only the centre grilling elements will heat up. Ideal for when cooking smaller quantities.

FULL SURFACE GRILL
The grill element is situated in the oven roof. It is thermostatically controlled and will cycle on and off to maintain the required temperature.

LOW TEMPERATURE COOKING
A special setting for hob-sealed prime cuts of meat and poultry. Meat/poultry is placed in a pre-heated dish and transferred into the oven. The low temperature setting uses a fixed temperature to gently tenderise without overcooking, resulting in meat/poultry that is juicy and melts in the mouth.

AIR FRY
The convenience of an Air Fryer inside the oven. This feature uses the grill and fan to create the same results. Using our Air Fryer and Grill Tray (Z1655CA0) further helps the air to circulate achieving optimum results.

BREAD BAKING
Bread baking temperature varies between 180°C and 220°C. Ideally suited to baking crusty bread with an open texture. Up to three levels of bread can be baked at the same time.

DOUGH PROVING
The Dough Proving function provides a controlled environment with a low and consistent temperature ideal for proofing dough. This feature offers home bakers a convenient and reliable way to proof dough, ensuring consistent results and saving time in the bread making process.

KEEP WARM
An ideal setting for keeping food warm without drying it out before serving. Typically set between 66°C to 100°C.

PLATE WARMING
Hot air is circulated at up to 65°C to safely warm plates and service dishes in preparation for dinner.

Special Features

HOME CONNECT
Control your oven directly from a Smart Device App or Voice Command. You can also download updates and additional functions.

MEAT PROBE
The Multi Point Meat Probe measures the joint's heat at three points and the Single Point Meat Probe measures in one point, ensuring the right core temperature is reached, so you can take the roast out when it's ready.

BAKING AND ROASTING ASSISTANT
Baking & Roasting Assistant helps you to Cook Meals with ease, by simply selecting pre-selected food items from the Bake & Roast Assist menu. Select your Meal on the display and you will find a suggested temperature & cooking time. For Baking, Roasting & Grilling the entire process gives perfect cooking results.

Cooking Functions With Steam

VARIO STEAM®
Vario Steam® enhances the cooking process by introducing controlled bursts of steam into the oven. Whether you're baking bread, roasting meats, or reheating leftovers, dishes come out with more intense flavour and an appetising appearance.

INTENSIVE STEAM (FULL STEAM)
Make your favourite dishes healthier with our Intensive steam function. Gently cook your dishes at up to 120°C, to preserve their natural flavour and lock in nutrients. It's easy to operate and also simple to refill the one litre water container – press a button to open the front panel, remove the container, fill it and you're ready to steam ahead.

REHEAT
Reheat allows you to gently warm dishes again – and thanks to the moisture in the oven, they will look and taste freshly prepared.

Oven Cleaning Functions

PYROLYTIC SELF-CLEANING
Pyrolytic cleaning is a self-cleaning system for ovens. The process superheats the oven to approximately 485°C, which burns off any deposits from baking, roasting and grilling. This creates a perfectly clean oven and a residue of fine dust that's easily removed with a damp cloth.

EASY CLEAN®
For a lightly soiled oven, put approximately 400ml of water and a drop of washing-up liquid in the base pan and then select the EasyClean® programme. It softens baked-on residue so you can just wipe it down, for fast and uncomplicated oven cleaning.

OVEN CLEANING
A special electronic setting designed to keep EcoClean® surfaces inside the oven as clean as possible. Used on a regular basis, it can keep the oven's interior lining remarkably clean with minimal maintenance required.

DESCALING
All NEFF steam appliances contain a descaling programme which can be set according to the hardness of the water.

BASE CLEAN
Base Clean helps clean the bottom of the oven by softening dirt with warm water. After the programme has finished you just have to wipe the base with a damp cloth.

ECO CLEAN
Eco Clean is a microfine ceramic bead coating on the oven's interior back, top or sides, depending on the model. It has a very large surface area, making it extremely absorbent. It absorbs fat droplets and keeps the inside of the oven clean.

DRYING FUNCTION
Dries the cooking compartment after a steam function.

AUTOMATIC SAFETY SWITCH OFF
For electronic ovens only, this feature will automatically cut in if no changes to the settings on the appliance have been made in a long time, giving you complete peace of mind.

Temperature range	Automatic switch off after
Under 140°C	73 hours
141 – 200°C	6 hours
201 – 250°C	3 hours
251°C	2 hours

Oven Feature
OVERVIEW

This overview highlights the features that can be included on a NEFF oven – the model specification will determine the features on each specific model.

N90 Full Touch 3

Full Touch Screen display; 6.8" high resolution TFT colour graphics display.

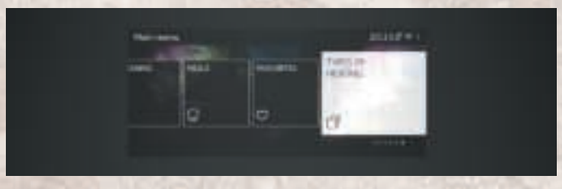

N90 Full Touch 2

Full Touch Screen display; 4.1" high resolution TFT colour graphics display.

N70 Full Touch 1

Full Touch Screen display; 3.7" high resolution TFT colour graphics display.

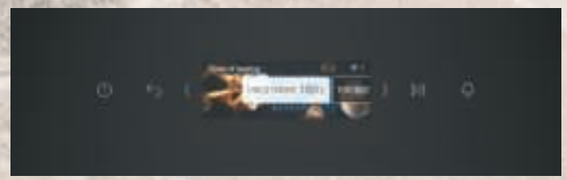

N50 Dial Control & LCD Screen

SINGLE OVENS				
VALUE CLASS	N90 | FULL TOUCH 3	N90 | FULL TOUCH 2	N70 | FULL TOUCH 1	N50 | DIAL CONTROL & LCD SCREEN
Colours Available	Graphite Grey	Graphite Grey	Graphite Grey	Graphite Grey
			Stainless Steel	Stainless Steel
OPERATION				
Premium Full Touch TFT Display	Full Touch 3 (FT3)	Full Touch 2 (FT2)	Full Touch 1 (FT1)	Dial Control & LCD Screen
SPECIAL FEATURES				
Door type	Slide & Hide® With Rotating Handle, SoftClose	Slide & Hide® With Rotating Handle, SoftClose	Slide & Hide® With Rotating Handle Drop Down Door Available	Slide & Hide® with Fixed Handle * Drop Down Door Available
Home Connect	●	●	●	Selected models only
Multi Point Temperature Probe	●			
SPECIAL FEATURES				
Features available within the Value Class				
Intensive Steam 120° (Full Steam)	●	●		
Vario Steam®	●	●		
Dough Proving w/ Vario Steam®	●	●		
Keep Warm w/ Vario Steam®	●	●		
Reheat w/Vario Steam®	●	●		
Circo Therm®	●	●	●	●
Circo Therm® Gentle	●	●	●	●
Top/bottom heat Gentle	●	●	●	
Bottom heat	●	●	●	●
Conventional heat/Conventional heat gentle	●	●	●	●
Low temperature cooking	●	●	●	
Hot air grilling	●	●	●	●
Centre Surface Grill	●	●	●	
Full surface grill	●	●	●	●
Circo Roasting	●	●		
Bread Baking Function	●	●		●
Pizza setting	●	●	●	●
Defrost	●	●		
Dough Proving	●	●	●	
Keep Warm	●	●	●	
Pre-heating	●	●	●	
Plate warming	●	●	●	
Oven capacity (L)	71	71	71	71

Get more with
HOME CONNECT

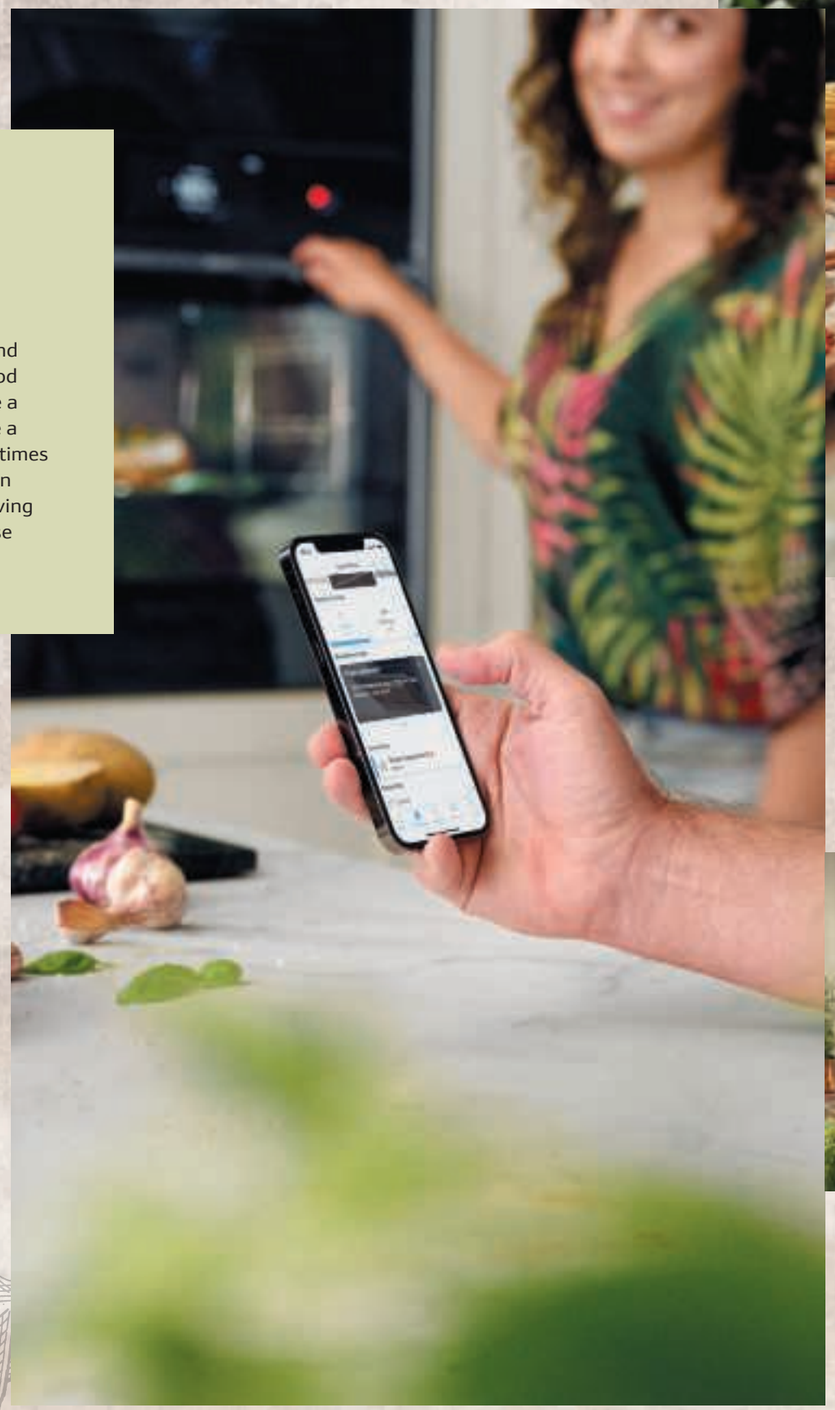

More time for your creativity and your guests.

Connections are important for NEFF and the connections that we make over food are our favourite ones. When we share a meal with family and friends, we share a connection around the table but sometimes we all need a little help. When you're in need of a little creative inspiration, having a partner in the kitchen can make those connections easier and stress free...

Home Connect

Perfect Partners

With food its not always about the refined presntation – it's about the flavour, the joy and the pleasure those shared meals bring. Stay better connected with your guests with oven control and monitoring via smartphone, voice or smartwatch. No more dashing back and forth to the kitchen – enjoy the benefits of our technology partnerships for perfect cooking results every time!

Looking for Inspiration?

Want to find a new way to cook something or have a lot of seasonal ingredients? Spend some time with our recipe partners on Home Connect and be inspired by others!

kitchen stories
ANYONE CAN COOK

Sharing Favourites

We all have our favourite recipes, the ones that connect us, make us feel nostalgic and the ones that keep us at the table until the last morsel has been enjoyed. Let your oven in on the secret – share oven settings for your favourite recipe for quick, convenient access and it'll be ready to go whenever you feel inspired!

Got your hands full creating your next dish?

Achieving perfect results has never been easier with Oven Assistant – simply use the Home Connect app or ask Alexa to find the perfect setting for your dish.

N90 and N70 Oven Range

All single ovens have:
- Circo Therm®

Home Connect

DISPLAY TYPE	SLIDE & HIDE® SINGLE OVENS - WITH ROTATING HANDLE AND SOFT/OPEN CLOSE			
	WITH INTENSIVE STEAM	WITH VARIO STEAM®		
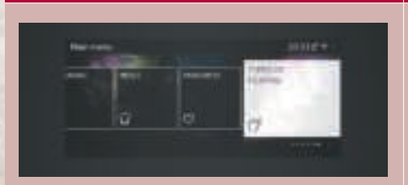 FULL TOUCH 3 - 6.8” FULL TOUCH TFT DISPLAY	**B64FT53G0B** • 22 Functions • Intensive Steam • Multipoint Temperature Probe	**B64VT73G0B** • 20 Functions • Vario Steam® • Pyrolytic • Multipoint Temperature Probe	**B64CT73G0B** • 14 Functions • Pyrolytic • Multipoint Temperature Probe	
FULL TOUCH 2 - 4.1” FULL TOUCH TFT DISPLAY	**B64FS31G0B** • 22 Functions • Intensive Steam	**B64VS71G0B** • 20 Functions • Vario Steam® • Pyrolytic	**B64CS71G0B** • 14 Functions • Pyrolytic	**B64CS51G0B** • 14 Functions • Ecoclean
FULL TOUCH 1 – N70 3.7” FULL TOUCH TFT DISPLAY			**GRAPHITE GREY: B54CR71G0B** **STAINLESS STEEL: B54CR71N0B** • 14 Functions • Pyrolytic	**GRAPHITE GREY: B54CR31G0B** **STAINLESS STEEL: B54CR31N0B** • 14 Functions • Ecoclean
DISPLAY TYPE	DROP DOWN DOOR			
FULL TOUCH 1 – N70 3.7” FULL TOUCH TFT DISPLAY			**B24CR71G0B** • 14 Functions • Pyrolytic	**B24CR31G0B** • 14 Functions

All compact ovens have:
- Soft Open / Close door

Home Connect

COMPACT OVENS			COFFEE MACHINE	MICROWAVES		
WITH STEAM	WITH MICROWAVE			WITHOUT GRILL	WITH GRILL	DROP DOWN DOOR WITH GRILL
C24FT53G0B • 22 Functions • Intensive Steam • Multipoint Temperature Probe	**C24MT73G0B** • 20 Functions • Pyrolytic • Multipoint Temperature Probe		**CL4TT11G0** • 11 Functions • Left Hinged Door			
C24FS31G0B • 22 Functions • Intensive Steam	**C24MS31G0B** • 20 Functions • Ecoclean	**C24MS71G0B** • 20 Functions • Pyrolytic				
	GRAPHITE GREY: C24MR21G0B **STAINLESS STEEL: C24MR21N0B** • 20 Functions			**LEFT HINGE: NL4WR21G1B** **RIGHT HINGE: NR4WR21G1B** • Up to 900w • 5 power levels	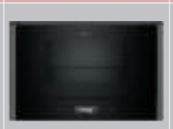 **LEFT HINGE: NL4GR31G1B** **RIGHT HINGE: NR4GR31G1B** • MW + grill • Up to 900w	**C24GR3XG1B** • Up to 1000w • 9 power levels • MW + grill

DISPLAY TYPE	14CM DRAWERS		29CM DRAWERS
	ACCESSORY DRAWER	WARMING DRAWER	WARMING DRAWER
All drawers have: • Push / Pull opening • 6 temperature settings (excludes Accessory Drawer)	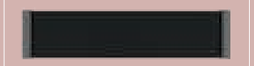 **N24ZA11G1**	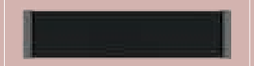 **GRAPHITE GREY: N24HA11G1B** **STAINLESS STEEL: N24HA11N1B**	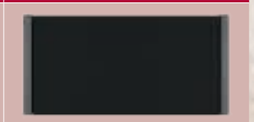 **GRAPHITE GREY N34HA11G1B** **STAINLESS STEEL: N34HA11N1B**

N50 Oven Range

DISPLAY TYPE	SLIDE & HIDE® SINGLE OVENS - WITH FIXED HANDLE*		
GRAPHITE GREY WITH LCD DISPLAY	**B6ACH7HG0B** • 8 Functions • Pyrolytic Home Connect	**B3ACE4HG0B** • 7 Functions	
STAINLESS STEEL WITH LCD DISPLAY	**B6ACH7HH0B** • 8 Functions • Pyrolytic Home Connect	**B3ACE4HN0B** • 7 Functions	**B4ACF1AN0B** • 6 Functions • *Rotating Handle

OVENS WITH DROP DOWN DOOR		COMPACT OVENS	MICROWAVES	
		C1AMG84G0B • 3 Functions • Microwave		**HLAWD23G0B** • 5 Functions
B2ACH7HH0B • 8 Functions • Pyrolytic Home Connect	**B1ACE4HN0B** • 6 Functions	**C1AMG84N0B** • 3 Functions • Microwave	**HLAWD53N0B** • 5 Functions	**HLAWD23N0B** • 5 Functions

DISPLAY TYPE	DOUBLE OVEN RANGE		
STAINLESS STEEL WITH LCD DISPLAY	**U2ACM7HH0B** • 8/4 Functions • Pyrolytic Home Connect	**U1ACE5HN0B** • 6/4 Functions	**U1ACE2HN0B** • 5/4 Functions
GRAPHITE GREY WITH LCD DISPLAY	**U2ACM7HG0B** • 8/4 Functions • Pyrolytic Home Connect		**U1ACE2HG0B** • 5/4 Functions

BUILT UNDER DOUBLE OVEN RANGE
J1ACE2HN0B • 20 Functions

WARMING DRAWERS	14CM DRAWERS		29CM DRAWERS
	STAINLESS STEEL	GRAPHITE GREY	STAINLESS STEEL
All drawers have: • Push / Pull opening • 6 temperature settings (excludes Accessory Drawer)	**N1AHA01N0B**	**N1AHA01G0B**	**N1AHA02N0B**

Create a sleek and stylish finish with Seamless Combinations

N90 and N70 Graphite Grey

Seamless Combination® strips – Z11SZ60G0
For 45cm Compact Oven with 14cm Warming Drawer

Seamless Combination® strips – Z11SZ80G0
For 60cm Single Slide & Hide® Oven with 29cm Warming Drawer

Seamless Combination® strips – Z11SZ90G0
For 60cm Single Slide & Hide® Oven with 45cm Compact Oven (special aperture applies)

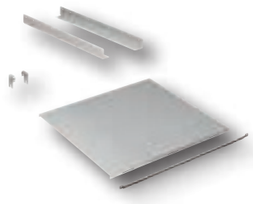

Black Cosmetic Decor strip – Z13CV06S0
For use between 60cm single and 45cm compact ovens

Compact Oven – C24MT73G0B
Compact Pyrolytic Oven with Microwave and a Full Touch 3 display

Warming Drawer – N24HA11G1B
N70 / N90

Single Oven – B64VT73G0B
Slide & Hide® Single Oven with Pyrolytic, Vario Steam® and a Full Touch 3 display

Warming Drawer – N34HA11G1B
Warming Drawer N90 / N70

Compact Oven – C24FT53G0B
Compact Steam Oven with Intensive Steam and a Full Touch 3 display

Single Oven – B64FT53G0B
Slide & Hide® Single Oven with Intensive Steam and a Full Touch 3 display

Mix and match your appliances

Create your perfect kitchen by choosing your very own appliance combination and cooking features to suit your lifestyle. With our Seamless Combination® strips you can seamlessly combine our N90 and N70 Collection of single ovens and compact appliances to create a sleek and stylish finish.

N70 Stainless Steel

Seamless Combination® strips – Z11SZ60X0
For 45cm Compact Oven with 14cm Warming Drawer

Seamless Combination® strips – Z11SZ80X1
For 60cm Single Slide & Hide® Oven with 29cm Warming Drawer

Seamless Combination® strips – Z11SZ90X0
For 60cm Single Slide & Hide® Oven with 45cm Compact Oven (special aperture applies)

Compact Oven – C24MR21N0B
Compact Oven with Microwave and a Full Touch 1 display

Warming Drawer – N24HA11N1B
Warming Drawer N70 / N90

Single Oven – B54CR31N0B
Single Oven with a Full Touch 1 display

Warming Drawer – N34HA11N1B
Warming Drawer N90 / N70

Compact Oven – C24MR21N0B
Compact Oven with Microwave and a Full Touch 1 display

Single Oven – B54CR71N0B
Slide & Hide® Single Pyrolytic Oven with Full Touch 1 display

Core Range Ovens - N90 / N70 Graphite Grey Trim

N90 - FULL TOUCH 3 - 6.8" FULL TOUCH TFT DISPLAY.

Collection	Display Size	Oven Description	No of Functions	Steam	Model Code
N90	Full Touch 3	Slide & Hide® Single Oven with Intensive Steam	22	Intensive	B64FT53G0B
N90	Full Touch 3	Slide & Hide® Single Pyrolytic Oven with Vario Steam®	20	Vario Steam®	B64VT73G0B
N90	Full Touch 3	Slide & Hide® Single Pyrolytic Oven	14		B64CT73G0B
N90	Full Touch 3	Compact Steam Oven with Intensive Steam	22	Intensive	C24FT53G0B
N90	Full Touch 3	Compact Pyrolytic Oven with Microwave	20		C24MT73G0B
N90	Full Touch 3	Compact 45cm Coffee Machine	11		CL4TT11G0

N90 - FULL TOUCH 2 - 4.1" FULL TOUCH TFT DISPLAY.

Collection	Display Size	Oven Description	No of Functions	Steam	Model Code
N90	Full Touch 2	Slide & Hide® Single Oven with Intensive Steam	22	Intensive	B64FS31G0B
N90	Full Touch 2	Slide & Hide® Single Pyrolytic Oven with Vario Steam®	20	Vario Steam®	B64VS71G0B
N90	Full Touch 2	Slide & Hide® Single Pyrolytic Oven	14		B64CS71G0B
N90	Full Touch 2	Slide & Hide® Single Oven	14		B64CS51G0B
N90	Full Touch 2	Compact Steam Oven	22	Intensive	C24FS31G0B
N90	Full Touch 2	Compact Oven with Microwave	20		C24MS31G0B
N90	Full Touch 2	Compact Pyrolytic Oven with Microwave	20		C24MS71G0B

N70 - FULL TOUCH 1 - 3.7" FULL TOUCH TFT DISPLAY.

Collection	Display Size	Oven Description	No of Functions	Steam	Model Code
N70	Full Touch 1	Slide & Hide® Single Pyrolytic Oven	14		B54CR71G0B
N70	Full Touch 1	Slide & Hide® Single Oven	14		B54CR31G0B
N70	Full Touch 1	Single Pyrolytic Oven	14		B24CR71G0B
N70	Full Touch 1	Single Oven	14		B24CR31G0B
N70	Full Touch 1	Compact Oven with Microwave	20		C24MR21G0B
N70	Full Touch 1	Compact Oven with Microwave	20		C24GR3XG1B
N70	Full Touch 1	Microwave with Grill - Up to 900W - Left Hinged Door			NL4GR31G1B
N70	Full Touch 1	Microwave with Grill - Up to 900W - Right Hinged Door			NR4GR31G1B
N70	Full Touch 1	Microwave Only - Up to 900W, 21 Litre - Left Hinged Door			NL4WR21G1B
N70	Full Touch 1	Microwave Only - Up to 900W, 21 Litre - Right Hinged Door			NR4WR21G1B

N90/N70 DRAWER RANGE

Collection	Drawer Range	Model Code
N90/70	29cm Warming Drawer	N34HA11G1B
N90/70	14cm Warming Drawer	N24HA11G1B
N90/70	14cm Accessory Drawer	N24ZA11G1

CORE RANGE SEAMLESS COMBINATION STRIPS - GRAPHITE GREY

Collection	Drawer Range	Model Code
N90/70	2 x 105cm Side Strips, Metal Platform & Brackets to install an N90 or an N70 single oven with a 45cm compact oven in column. (Single aperture required)	Z11SZ90G0
N90/70	2 x 90cm Side Strips to install an N90 or an N70 single oven with a 29cm warming drawer in column.	Z11SZ80G0
N90/70	2 x 60cm Side Strips to install an N90 or an N70 compact oven with a 14cm drawer in column.	Z11SZ60G0
N90/70/50	Black Cosmetic Decor strip for use between 60cm single and 45cm compact ovens	Z13CV06S0

Core Range Ovens - N70 Stainless Steel Trim

N70 - FULL TOUCH 1 - 3.7" FULL TOUCH TFT DISPLAY.

Collection	Display Size	Oven Description	No of Functions	Steam	Model Code
N70	Full Touch 1	Slide & Hide® Single Pyrolytic Oven	14		B54CR71N0B
N70	Full Touch 1	Slide & Hide® Single Oven	14		B54CR31N0B
N70	Full Touch 1	Compact Oven with Microwave	20		C24MR21N0B

N70 DRAWER RANGE

Collection	Drawer Range	Model Code
N70	29cm Warming Drawer	N34HA11N1B
N70	14 cm Warming Drawer	N24HA11N1B

CORE RANGE SEAMLESS COMBINATION STRIPS - STAINLESS STEEL

Collection	Drawer Range	Model Code
N70	2 x 105cm Side Strips, Metal Platform & Brackets to install an N90 or an N70 single oven with a 45cm Compact oven in column. (Single aperture required)	Z11SZ80X1
N70	2 x 90cm Side Strips to install an N90 or an N70 single oven with a 29cm warming drawer in column.	Z11SZ90X0
N70	2 x 60cm Side Strips to install an N90 or an N70 compact oven with a 14cm drawer in column.	Z11SZ60X0

Core Range Ovens - N50

NEFF N50 OVENS WITH SLIDE & HIDE® DOOR

Collection	Display Size	Oven Description	No of Functions	Colour	Home Connect	Model Code
N50	LCD Display	Slide & Hide® Single Pyrolytic Ovens	8	Graphite Grey	Yes	B6ACH7HG0B
N50	LCD Display	Slide & Hide® Single Pyrolytic Ovens	8	Stainless Steel	Yes	B6ACH7HH0B
N50	LCD Display	Slide & Hide® Single Ovens	7	Graphite Grey		B3ACE4HG0B
N50	LCD Display	Slide & Hide® Single Ovens	7	Stainless Steel		B3ACE4HN0B
N50	LCD Display	Slide & Hide® Single Ovens	6	Stainless Steel		B4ACF1AN0B

NEFF N50 OVENS WITH DROP DOWN DOOR

Collection	Display Size	Oven Description	No of Functions	Colour	Home Connect	Model Code
N50	LCD Display	Single Pyrolytic Ovens	8	Stainless Steel	Yes	B2ACH7HH0B
N50	LCD Display	Single Ovens	6	Stainless Steel		B1ACE4HN0B

NEFF N50 COMPACT OVENS & MICROWAVES

Collection	Display Size	Oven description	No of Functions	Colour	Home Connect	Model Code
N50	LCD Display	Compact 45cm Microwave Combination Ovens	3	Graphite Grey		C1AMG84G0B
N50	LCD Display	Compact 45cm Microwave Combination Ovens	3	Stainless Steel		C1AMG84N0B
N50	White LCD Display	Microwave Ovens	5	Stainless Steel		HLAWD53N0B
N50	White LCD Display	Microwave Ovens	5	Graphite Grey		HLAWD23G0B
N50	White LCD Display	Microwave Ovens	5	Stainless Steel		HLAWD23N0B

N50 DOUBLE OVEN RANGE

Collection	Display Size	Oven Description	No of Functions	Colour	Home Connect	Model Code
N50	LCD Display	Double Ovens Pyrolytic	8/4	Graphite Grey	Yes	U2ACM7HG0B
N50	LCD Display	Double Ovens Pyrolytic	8/4	Stainless Steel	Yes	U2ACM7HH0B
N50	LCD Display	Double Ovens	6/4	Stainless Steel		U1ACE5HN0B
N50	LCD Display	Double Ovens	5/4	Graphite Grey		U1ACE2HG0B
N50	LCD Display	Double Ovens	5/4	Stainless Steel		U1ACE2HN0B

N50 BUILT UNDER DOUBLE OVEN RANGE

Collection	Display Size	Oven Description	No of Functions	Colour	Home Connect	Model Code
N50	LCD Display	Built under Double Ovens	6/4	Stainless Steel		J1ACE2HN0B

N50 DRAWER RANGE

Collection	Drawer Range	Colour	Model Code
N50	29cm Warming Drawer	Stainless Steel	N1AHA02N0B
N50	14cm Warming Drawer	Graphite Grey	N1AHA01G0B
N50	14cm Warming Drawer	Stainless Steel	N1AHA01N0B

Optional Accessories for Ovens and Compacts

NEFF OPTIONAL ACCESSORIES	DESCRIPTION	SUITABLE FOR
SHELVES & INTERNAL RAILS		
Z11CR10X0	Full width wire shelf.	N90 & N70 single & compact ovens and N50 single ovens.
Z1608BX0	1 pair of level independent telescopic shelf rails with stop, fully extendible, for non-pyrolytic, non-full steam.	N70 & N90 ovens
Z1608CX0	1 pair of level independent telescopic shelf rails with stop, fully extendible.	N70 & N90 Pyrolytic ovens
Z1608DX0	1 pair of level independent telescopic shelf rails with stop, fully extendible.	N90 Steam ovens
Z1650BE0	2 piece, half depth enamel pan set.	N90 Steam ovens
Z11TI15X0	1 pair of level independent ClipRail telescopic rails.	N50 single and double ovens
AIR FRYER ACCESSORY - AIR FRY FUNCTION AVAILABLE AS A HOME CONNECT DOWNLOAD.		
Z1655CA0	Air Fryer & Grill tray.	Required for Air Fry Function, for NEFF ovens with Home Connect .
INTERMEDIATE PLATFORM		
Z11SZ00X0	Intermediate Floor for combining 2 ovens	N90 & N70
SEAMLESS COMBINATION ACCESSORIES - GRAPHITE GREY		
Z11SZ60G0	Seamless Combination strips - 45cm Compact & 14cm Drawer. Graphite Grey	N90 & N70 Compact Ovens & 14cm Warming Drawer. NOT suitable for 45cm N90 Coffee machine or C24GR3XG1B - N70 Compact Microwave.
Z11SZ80G0	Seamless Combination strips - 60cm Slide & Hide® Single Oven & 29cm Warming Drawer - Graphite Grey	N90 & N70 60cm Slide&Hide single ovens and 29cm warming drawer.
Z11SZ90G0	Seamless Combination strips, metal platform and brackets for Slide & Hide® single oven and selected 45cm Compact ovens in column. Graphite Grey	N90 & N70 single oven and selected 45cm Compact (special single aperture required; not suited to Coffee Machine and C24GR3XG1B)
SEAMLESS COMBINATION ACCESSORIES - STAINLESS STEEL		
Z11SZ60X0	Seamless Combination strips - 45cm Compact & 14cm Drawer. Stainless Steel	N90 & N70 Compact Ovens & 14cm Warming Drawer. NOT suitable for 45cm N90 Coffee machine.
Z11SZ80X1	Seamless Combination strips - 60cm Slide & Hide® Single Oven & 29cm Warming Drawer - Stainless Steel	N90 & N70 60cm Slide&Hide single ovens and 29cm warming drawer.
Z11SZ90X0	Seamless Combination strips, metal platform and brackets for Slide & Hide® single oven and selected 45cm Compact ovens in column. Stainless Steel	N90 & N70 single oven and selected 45cm Compact (special single aperture required; not suited to Coffee Machine)
SEAMLESS COMBINATION ACCESSORIES -OTHER		
Z13CV06S0	Cosmetic decor strip for use between 60cm single and 45cm compact ovens	N90, N70, N50

N90 Full Touch 3 Single & Compact Ovens

- Electronic, 6.8" Premium Full Touch TFT Display on all models
- All ovens feature Circo Therm®

Home Connect

60CM SLIDE & HIDE® SINGLE OVEN

	INTENSIVE STEAM B64FT53G0B | N90	VARIO STEAM®/PYROLYTIC B64VT73G0B | N90	PYROLYTIC B64CT73G0B | N90
	• 22 functions, inc. Full Steam • Multi Point Temperature Probe • Rotating handle • Soft open/close door • Graphite Grey	• 20 functions, inc. Vario Steam® • Multi Point Temperature Probe • Rotating handle • Soft open/close door • Graphite Grey	• 14 functions • Multi Point Temperature Probe • Rotating handle • Soft open/close door • Graphite Grey
CONTROLS			
Electronic control	●	●	●
Temperature proposal with display	●	●	●
Heating up indicator / Residual heat indicator	●/●	●/●	●/●
Control panel lock / Safety switch off	●/●	●/●	●/●
Automatic programmes	●	●	●
SPECIAL FEATURES			
Door type	Slide & Hide® With Rotating Handle, SoftClose	Slide & Hide® With Rotating Handle, SoftClose	Slide & Hide® With Rotating Handle, SoftClose
Soft open door	●	●	●
Oven Assistant with Voice Control	●	●	●
Home Connect	●	●	●
Telescopic Rail	Available as an accessory	Available as an accessory	Available as an accessory
Multi Point Temperature Probe	●	●	●
Single Point Meat Probe	●	●	●
Rapid heat up	●	●	●
Baking and roasting assistant	●	●	●
FEATURES			
Electronic clock / timer	White TFT Display	White TFT Display	White TFT Display
Full glass inner door	●	●	●
Glazed door (Quadruple / Triple/Double)	Triple (CoolTouch door)	Quadruple (CoolTouch door)	Quadruple (CoolTouch door)
Internal lighting	LED Light	LED Light	LED Light
Water tank empty indicator	●	●	
COOKING FUNCTIONS	22	20	14
FullSteam 100% / Intensive Steam	●		
Vario Steam®	●	●	
Steam Boost	●	●	
Keep Warm with Added Steam / Reheat with Added Steam	●/●	●/●	
Circo Therm®	●	●	●
Circo Therm® Gentle / Top / bottom heat Gentle	●/●/●	●/●/●	●/●/●
Bottom heat	●	●	●
Conventional heat / Conventional heat gentle	●/●	●/●	●/●
Low temperature cooking / Pre-heating	●/●	●/●	●/●
Circo Roasting / Hot air grilling	●/●	●/●	●/●
Full surface grill / Centre Surface Grill	●/●	●/●	●/●
Bread Baking Function / Pizza setting / Plate warming	●/●/●	●/●/●	●/●/●
Defrost / Dough Proving / Keep warm	●/●/●	/●/●	/●
Microwave Power Settings W			
Microwave Cooking Programmes			
OVEN CLEANING			
Pyrolytic cleaning		●	●
Easy Clean® / Base Clean	●/●	●/●	●/●
Eco Clean Surface	●		
Cleaning setting	●	●	●
Descaling programme	●	●	
STANDARD ACCESSORIES			
Universal pan	1	1	1
Combination Grid	2	2	2
ENERGY EFFICIENCY[1]			
Energy efficiency class	A+	A+	A+
Energy consumption per cycle Circo Therm® kWh	0.69	0.69	0.69
Energy consumption per cycle conventional kWh	0.87	0.87	0.87
Oven capacity L	71	71	71
Time to cook standard load mins	44	44	44
Largest baking sheet area cm^2	1290	1290	1290
TECHNICAL INFORMATION			
Total connected load kW	3.6	3.6	3.6

45CM COMPACT OVENS

	INTENSIVE STEAM C24FT53G0B | N90	PYROLYTIC/WITH MICROWAVE C24MT73G0B | N90
	• 22 functions, inc. Full Steam • Multi Point Temperature Probe • Rotating handle • Soft open/close door • Graphite Grey	• 22 functions, inc. Pyrolytic • Multi Point Temperature Probe • Rotating handle • Soft open/close door • Graphite Grey
CONTROLS		
Electronic control	●	●
Temperature proposal with display	●	●
Heating up indicator / Residual heat indicator	●/●	●/●
Control panel lock / Safety switch off	●/●	●/●
Automatic programmes	●	●
SPECIAL FEATURES		
Door type	Drop Down, soft close	Drop Down, soft close
Soft open door	●	●
Oven Assistant with Voice Control	●	●
Home Connect	●	●
Telescopic Rail	Available as an accessory	Available as an accessory
Multi Point Temperature Probe	●	●
Single Point Meat Probe	●	●
Rapid heat up	●	●
Baking and roasting assistant	●	●
FEATURES		
Electronic clock / timer	●	●
Full glass inner door	●	●
Glazed door (Quadruple / Triple/Double)	Triple (CoolTouch door)	Quadruple (CoolTouch door)
Internal lighting	LED Light	LED Light
Water tank empty indicator	●	
COOKING FUNCTIONS	22	20
FullSteam 100% / Intensive Steam	●	
Vario Steam®	●	
Steam Boost	●	
Keep Warm with Added Steam / Reheat with Added Steam	●/●	
Circo Therm®	●	●
Circo Therm® Gentle / Top / bottom heat Gentle	●/●/●	●/●/●
Bottom heat	●/●	●/●
Conventional heat / Conventional heat gentle	●/●	●/●
Low temperature cooking / Pre-heating	●/●	●/●
Circo Roasting / Hot air grilling	●/●	●/●
Full surface grill / Centre Surface Grill	●/●	●/●
Bread Baking Function / Pizza setting / Plate warming	●/●/●	●/–/●
Defrost / Dough Proving / Keep warm	●/●/●	–/●/●
Microwave Power Settings W		90, 180, 360, 600, boost
Microwave Cooking Programmes		●
OVEN CLEANING		
Pyrolytic cleaning		●
Easy Clean® / Base Clean	●/●	●/●
Eco Clean Surface	●	
Cleaning setting	●	●
Descaling programme	●	
STANDARD ACCESSORIES		
Universal pan		
Combination Grid		
ENERGY EFFICIENCY[1]		
Energy efficiency class	A+	
Energy consumption per cycle Circo Therm® kWh	0.61	
Energy consumption per cycle conventional kWh	0.73	
Oven capacity L	47	45
Time to cook standard load mins	40.5	
Largest baking sheet area cm^2	1290	1290
TECHNICAL INFORMATION		
Total connected load kW	3.3	3.6

45CM COFFEE CENTRE

	CL4TT11G0 | N90
	• Multiple international coffee variations • Strength and aroma management • Left hinged door • Graphite Grey
OPERATION	
Premium Full Touch TFT Display Type	Full Touch 3
Screen Size	6.8"
CONTROLS	
Electronic control	●
Water level indicator	●
Descaling indicator	●
Automatic programmes	●
Child Safety	●
Child Lock	●
Home Connect	●
FEATURES	
Left-hand Door Hinge	●
Automatic milk amount detection	●
Height adjustable beverage outlet (max 15cm)	●
One Touch Double Cup	●
Illuminated coffee outlet, stage and interior	●
Water Pump (19 bar pressure)	●
6 adjustable grinding degree settings (multi-level)	●
30 min Auto-standby	●
FLAVOUR FEATURES	
Up to 29 Coffee Specialties	●
Coffee Pot Function	●
Aroma Select	●
Warm milk	●
Milk froth	●
Hot water function	●
Adjustable milk ratio	●
Intelligent strength adjustment	●
AromaDouble Shot	●
CLEANING	
Auto Milk Clean	●
Calc'nClean	●
Removable Brewing Unit	●
Dishwasher Proof (bevarage outlet, drip tray/pans)	●
Automatic reminder	●
ACCESSORIES	
Test strip	●
Cleaning Tablets	●
Descaling Tablets	●
BRITA Intenza Water Filter	●
Care set	●
ENERGY EFFICIENCY	
Nominal Voltage V	220-240
Total connected load kW	1.5
Mains Frequency Hz	50 / 60
TECHNICAL INFORMATION	
Appliance Dimensions HxWxD mm	455x594x385
Mounted Dimensions HxWxD mm	449x558x376
Removable water tank L	2.4
Integrated milk container L	0.5
Bean container with aroma protection lid g	500
Cable length cm	170

1 Measured according the EN50304, 65/2014. 2 For further information on inverter technology, please go to www.neffhome.com/uk. 3For Inverter models, the maximum setting offers a time limited boost option for heating liquids. To ensure optimal results and to protect the appliance, the microwave power output is reduced in stages over the first few minutes down to the next power level (600W). After a cooling period, the microwave boost option will be available once more.

N90 Full Touch 2 Single & Compact Ovens

- Electronic, 4.1" Full Touch TFT Display on all models
- All ovens feature Circo Therm®

Home Connect

	60CM SLIDE & HIDE® SINGLE OVEN		
	INTENSIVE STEAM B64FS31G0B | N90	VARIO STEAM® B64VS71G0B | N90	PYROLYTIC B64CS71G0B | N90
	• 22 functions, inc. Full Steam • Rotating handle • Soft open/close door • Graphite Grey	• 20 functions, inc. Vario Steam® • Rotating handle • Soft open/close door • Graphite Grey	• 14 functions • Rotating handle • Soft open/close door • Graphite Grey
CONTROLS			
Electronic control	●	●	●
Temperature proposal with display	●	●	●
Heating up indicator / Residual heat indicator	●/●	●/●	●/●
Control panel lock / Safety switch off	●/●	●/●	●/●
Automatic programmes	●	●	●
SPECIAL FEATURES			
Door type	Slide & Hide® With Rotating Handle, SoftClose	Slide & Hide® With Rotating Handle, SoftClose	Slide & Hide® With Rotating Handle, SoftClose
Soft open door	●	●	●
Oven Assistant with Voice Control	●	●	●
Home Connect	●	●	●
Telescopic Rail	Available as an accessory	Available as an accessory	Available as an accessory
Multi Point Temperature Probe		●	●
Single Point Meat Probe		●	●
Rapid heat up	●	●	●
Baking and roasting assistant	●	●	●
FEATURES			
Electronic clock / timer	White TFT Display	White TFT Display	White TFT Display
Full glass inner door	●	●	●
Glazed door (Quadruple / Triple/Double)	Triple (CoolTouch door)	Quadruple (CoolTouch door)	Quadruple (CoolTouch door)
Internal lighting	LED Light	LED Light	LED Light
Water tank empty indicator	●	●	
COOKING FUNCTIONS	23	20	14
FullSteam 100% / Intensive Steam	●		
Vario Steam®	●	●	
Steam Boost	●	●	
Keep Warm with Added Steam / Reheat with Added Steam	●/●	●	
Circo Therm®	●	●	●
Circo Therm® Gentle / Top / bottom heat Gentle	●/●/●	●/●/●	●/●/●
Bottom heat	●	●	●
Conventional heat / Conventional heat gentle	●/●	●/●	●/●
Low temperature cooking / Pre-heating	●/●	●/●	●/●
Circo Roasting / Hot air grilling	●/●	●/●	●/●
Full surface grill / Centre Surface Grill	●/●	●/●	●/●
Bread Baking Function / Pizza setting / Plate warming	●/●/●	●/●/●	●/●/
Defrost / Dough Proving / Keep warm	●/●/●	/●	/●/●
Microwave Power Settings W			
Microwave Cooking Programmes			
OVEN CLEANING			
Pyrolytic cleaning		●	●
Easy Clean® / Base Clean	●/●	●/●	●/●
Eco Clean Surface	●		
Cleaning setting	●	●	●
Descaling programme	●	●	
STANDARD ACCESSORIES			
Universal pan	1	1	1
Steam Container	3		
Combination Grid	2	2	2
ENERGY EFFICIENCY[1]			
Energy efficiency class	A+	A+	A+
Energy consumption per cycle Circo Therm® kWh	0.69	0.69	0.69
Energy consumption per cycle conventional kWh	0.87	0.87	0.87
Oven capacity L	71	71	71
Time to cook standard load mins	44	44	44
Largest baking sheet area cm^2	1290	1290	1290
TECHNICAL INFORMATION			
Total connected load kW	3.6	3.6	3.6

	60CM SLIDE & HIDE® SINGLE OVEN	45CM COMPACT OVENS		
	B64CS51G0B | N90	INTENSIVE STEAM C24FS31G0B | N90	PYROLYTIC/WITH MICROWAVE C24MS71G0B | N90	PYROLYTIC WITH MICROWAVE C24MS31G0B | N90
	• 14 functions • Rotating handle • Soft open/close door • Graphite Grey	• 22 functions, inc. Full Steam • Soft open/close door • Graphite Grey	• 20 functions, inc. Pyrolytic • Soft open/close door • Graphite Grey	• 20 functions, inc. Pyrolytic • Soft open/close door • Graphite Grey
CONTROLS				
Electronic control	●	●	●	●
Temperature proposal with display	●	●	●	●
Heating up indicator / Residual heat indicator	●/●	●/●	●/●	●/●
Control panel lock / Safety switch off	●/●	●/●	●/●	●/●
Automatic programmes	●	●	●	●
SPECIAL FEATURES				
Door type	Slide & Hide® With Rotating Handle, SoftClose	Drop Down, soft close	Drop Down, soft close	Drop Down, soft close
Soft open door	●	●	●	●
Oven Assistant with Voice Control	●	●	●	●
Home Connect	●	●	●	●
Telescopic Rail	Available as an accessory	Available as an accessory	Available as an accessory	1 x Clip Rail, Full Extn Stop Function
Multi Point Temperature Probe				
Single Point Meat Probe				
Rapid heat up	●	●	●	●
Baking and roasting assistant	●	●	●	●
FEATURES				
Electronic clock / timer	White TFT Display	●	●	●
Full glass inner door	●	●	●	●
Glazed door (Quadruple / Triple/Double)	Triple (CoolTouch door)	Triple (CoolTouch door)	Quadruple (CoolTouch door)	Triple (CoolTouch door)
Internal lighting	LED Light	LED Light	LED Light	LED Light
Water tank empty indicator		●		
COOKING FUNCTIONS	14			
FullSteam 100% / Intensive Steam		●		
Vario Steam®		●		
Steam Boost		●		
Keep Warm with Added Steam / Reheat with Added Steam		●/●		
Circo Therm®	●	●	●	●
Circo Therm® Gentle / Top / bottom heat Gentle	●/●/●	●/●/●	●/●/●	●/●/●
Bottom heat	●	●/●	●/●	●/●
Conventional heat / Conventional heat gentle	●/●	●/●	●/●	●/●
Low temperature cooking / Pre-heating	●/●	●/●	●/●	●/●
Circo Roasting / Hot air grilling	/●	●/●	●/●	●/●
Full surface grill / Centre Surface Grill	●/●	●/●	●/●	●/●
Bread Baking Function / Pizza setting / Plate warming	/●/●	●/●/●	●/●/●	●/●/●
Defrost / Dough Proving / Keep warm	/●/●	●/●/●	/●/●	●/●/●
Microwave Power Settings W			90, 180, 360, 600, boost	90, 180, 360, 600, boost
Microwave Cooking Programmes			●	●
OVEN CLEANING				
Pyrolytic cleaning			●	
Easy Clean® / Base Clean	●/●	●/●	●/●	●/●
Eco Clean Surface	●	●		
Cleaning setting	●	●	●	●
Descaling programme		●		
STANDARD ACCESSORIES				
Universal pan	1			
Steam Container				
Combination Grid	2			
ENERGY EFFICIENCY[1]				
Energy efficiency class	A+	A+		
Energy consumption per cycle Circo Therm® kWh	0.69	0.61		
Energy consumption per cycle conventional kWh	0.87	0.73		
Oven capacity L	71	47	45	45
Time to cook standard load mins	44	40.5		
Largest baking sheet area cm^2	1290	1290	1290	1290
TECHNICAL INFORMATION				
Total connected load kW	3.6	3.3	3.6	3.6

1 Measured according the EN50304, 65/2014. 2 For further information on inverter technology, please go to www.neffhome.com/uk. 3For Inverter models, the maximum setting offers a time limited boost option for heating liquids. To ensure optimal results and to protect the appliance, the microwave power output is reduced in stages over the first few minutes down to the next power level (600W). After a cooling period, the microwave boost option will be available once more.

N70 Full Touch 1 Single Ovens

- Electronic, 3.7" Full Touch TFT Display on all models
- All ovens feature Circo Therm®

Home Connect

	60CM SLIDE & HIDE® SINGLE OVEN		60CM SLIDE & HIDE® SINGLE OVEN		60CM SINGLE OVEN - DROP DOWN DOOR	
	PYROLYTIC B54CR71G0B | N70	PYROLYTIC / STAINLESS STEEL B54CR71N0B | N70	B54CR31G0B | N70	STAINLESS STEEL B54CR31N0B | N70	PYROLYTIC/FIXED HANDLE B24CR71G0B | N70	ROTATING HANDLE B24CR31G0B | N70
	• 14 functions • Rotating handle • Soft open door • Graphite Grey	• 14 functions • Rotating handle • Soft open door • Stainless Steel	• 14 functions • Rotating handle • Soft open door • Graphite Grey	• 14 functions • Rotating handle • Soft open door • Stainless Steel	• 14 functions • Fixed handle • Soft open/close door • Graphite Grey	• 14 functions • Rotating handle • Soft open/close door • Stainless Steel
OPERATION						
Premium Full Touch TFT Display Type	Full Touch 1	Full Touch 1	Full Touch 1	Full Touch 1	Full Touch 1	Full Touch 1
Screen Size	3.7"	3.7"	3.7"	3.7"	3.7"	3.7"
CONTROLS						
Electronic control	●	●	●	●	●	●
Temperature proposal with display	●	●	●	●	●	●
Heating up indicator / Residual heat indicator	●/●	●/●	●/●	●/●	●/●	●/●
Control panel lock / Safety switch off	●/●	●/●	●/●	●/●	●/●	●/●
Automatic programmes	●	●	●	●	●	●
SPECIAL FEATURES						
Door type	Slide & Hide® With Rotating Handle, SoftClose	Slide & Hide® With Rotating Handle, SoftClose	Slide & Hide® With Rotating Handle, SoftClose	Slide & Hide® With Rotating Handle, SoftClose	Drop Down Door With Rotating Handle, SoftClose	Drop Down Door With Rotating Handle, SoftClose
Soft open door	●	●	●	●	●	●
Oven Assistant with Voice Control	●	●	●	●	●	●
Home Connect	●	●	●	●	●	●
Telescopic Rail	Available as an accessory	Available as an accessory	Available as an accessory	Available as an accessory	Available as an accessory	Available as an accessory
Rapid heat up	●	●	●	●	●	●
Baking and roasting assistant	●	●	●	●	●	●
FEATURES						
Electronic clock / timer	White TFT Display	White TFT Display	White TFT Display	White TFT Display	White TFT Display	White TFT Display
Full glass inner door	●	●	●	●	●	●
Glazed door (Quadruple / Triple / Double)	Quadruple (CoolTouch door)	Quadruple (CoolTouch door)	Triple (CoolTouch door)	Quadruple (CoolTouch door)	Quadruple (CoolTouch door)	Triple (CoolTouch door)
Internal lighting	LED Light	LED Light	LED Light	LED Light	LED Light	LED Light
Water tank empty indicator						
COOKING FUNCTIONS	14	14	14	14	14	14
Circo Therm®	●	●	●	●	●	●
Circo Therm® Gentle / Top / bottom heat Gentle	●/●/●	●/●/●	●/●/●	●/●/●	●/●/●	●/●/●
Bottom heat	●	●	●	●	●	●
Conventional heat / Conventional heat gentle	●/●	●/●	●/●	●/●	●/●	●/●
Low temperature cooking / Pre-heating	●/●	●/●	●/●	●/●	●/●	●/●
Circo Roasting / Hot air grilling	/●	/●	/●	/●	/●	/●
Full surface grill / Centre Surface Grill	●/●	●/●	●/●	●/●	●/●	●/●
Bread Baking Function / Pizza setting / Plate warming	/●/●	/●/●	/●/●	/●/●	/●/●	/●/●
Defrost / Dough Proving / Keep warm	/●/●	/●/●	/●/●	/●/●	/●/●	/●/●
OVEN CLEANING						
Pyrolytic cleaning	●	●		●		
Easy Clean® / Base Clean	●/●	●/●	●/●	●/●	●/●	●/●
Eco Clean Surface			●		●	●
Cleaning setting	●	●	●	●	●	●
STANDARD ACCESSORIES						
Universal pan	1	1	1	1	1	1
Combination Grid	2	2	2	2	2	2
ENERGY EFFICIENCY[1]						
Energy efficiency class	A+	A+	A+	A+	A+	A+
Energy consumption per cycle Circo Therm® kWh	0.69	0.69	0.69	0.69	0.69	0.69
Energy consumption per cycle conventional kWh	0.87	0.87	0.87	0.87	0.87	0.87
Oven capacity L	71	71	71	71	71	71
Time to cook standard load mins	44	44	44	44	44	44
Largest baking sheet area cm^2	1290	1290	1290	1290	1290	1290
TECHNICAL INFORMATION						
Total connected load kW	3.6	3.6	3.6	3.6	3.6	3.6

1 Measured according the EN50304, 65/2014. 2 For further information on inverter technology, please go to www.neffhome.com/uk. 3For Inverter models, the maximum setting offers a time limited boost option for heating liquids. To ensure optimal results and to protect the appliance, the microwave power output is reduced in stages over the first few minutes down to the next power level (600W). After a cooling period, the microwave boost option will be available once more.

N70 Full Touch 1 Compact Ovens with Microwave & Compact Microwaves

- Electronic, 3.7" Full Touch TFT Display on all models

	45CM COMPACT OVENS		45CM COMPACT MICROWAVE
	WITH MICROWAVE C24MR21G0B | N70	WITH MICROWAVE C24MR21N0B | N70	WITH GRILL C24GR3XG1B | N70
	• 20 functions • Soft open/close door • Graphite Grey	• 20 functions • Soft open/close door • Stainless Steel	• MW plus Grill with combination option, up to 1000W MW output • Soft close door • Graphite Grey
OPERATION			
Premium Full Touch TFT Display Type	Full Touch 1	Full Touch 1	Full Touch 1
Screen Size	3.7"	3.7"	3.7"
CONTROLS			
Electronic control	●	●	●
Temperature proposal with display	●	●	●
Heating up indicator / Residual heat indicator	●/●	●/●	●/●
Control panel lock / Safety switch off	●/●	●/●	●/●
Automatic programmes	●	●	●
SPECIAL FEATURES			
Door type	Drop Down, soft close	Drop Down, soft close	Drop Down, soft close
Soft open door	●	●	
Oven Assistant with Voice Control	●	●	
Home Connect	●	●	
Telescopic Rail	Available as an accessory	Available as an accessory	
Multi Point Temperature Probe			
Single Point Meat Probe			
Rapid heat up	●	●	●
Baking and roasting assistant	●	●	
FEATURES			
Electronic clock / timer	●	●	●
Full glass inner door	●	●	●
Glazed door (Quadruple / Triple/Double)	Triple (CoolTouch door)	Triple (CoolTouch door)	Triple (CoolTouch door)
Internal lighting	LED Light	LED Light	LED Light
Water tank empty indicator			
COOKING FUNCTIONS	1 heating mode	1 heating mode	2 heating mode
FullSteam 100% / Intensive Steam			
Circo Therm® with Added Steam			
Dough Proving with Added Steam			
Keep Warm with Added Steam			
Reheat with Added Steam			
Sous-vide cooking			
Circo Therm®			
Circo Therm® Gentle / Top / bottom heat Gentle			
Bottom heat			
Conventional heat / Conventional heat gentle			
Low temperature cooking / Pre-heating			
Circo Roasting / Hot air grilling			
Full surface grill / Centre Surface Grill			●/
Bread Baking Function / Pizza setting / Dough proving			
Defrost / Plate warming / Keep warm			
Microwave Power Settings W	90, 180, 360, 600, boost	90, 180, 360, 600, boost	90, 180, 360, 600, 1000
Microwave Cooking Programmes	●	●	3 Defrost / 4 Cooking
OVEN CLEANING			
Pyrolytic cleaning			
Easy Clean® / Base Clean	●/●	●/●	●/●
Eco Clean Surface			
Cleaning setting	●	●	●
Descaling programme			
ENERGY EFFICIENCY[1]			
Energy efficiency class			
Energy consumption per cycle Circo Therm® kWh			
Energy consumption per cycle conventional kWh			
Oven capacity L	45	45	36
Time to cook standard load mins			
Largest baking sheet area cm^2	1290	1290	
TECHNICAL INFORMATION			
Total connected load kW	3.6	3.6	3.1

	38CM MICROWAVE			
	WITH GRILL/LEFT OPENING NL4GR31G1B | N70	WITH GRILL/RIGHT OPENING NR4GR31G1B | N70	WITHOUT GRILL/LEFT OPENING NL4WR21G1B | N70	WITHOUT GRILL/RIGHT OPENING NR4WR21G1B | N70
	• MW plus Grill with combination option, up to 900W MW output, 21L • Left hinged door • Graphite Grey	• MW plus Grill with combination option, up to 900W MW output, 21L • Right hinged door • Graphite Grey	• MW only, up to 900W MW output, 21L • Left hinged door • Graphite Grey	• MW only, up to 900W MW output, 21L • Right hinged door • Graphite Grey
OPERATION				
Premium Full Touch TFT Display Type	Full Touch 1	Full Touch 1	Full Touch 1	Full Touch 1
Screen Size	3.7"	3.7"	3.7"	3.7"
CONTROLS				
Electronic control	●	●	●	●
Temperature proposal with display	●	●	●	●
Heating up indicator / Residual heat indicator	●/●	●/●	●/●	●/●
Control panel lock / Safety switch off	●/●	●/●	●/●	●/●
Automatic programmes	●	●	●	●
SPECIAL FEATURES				
Door type	Left hinged door	Right hinged door	Left hinged door	Right hinged door
Soft open door				
Oven Assistant with Voice Control				
Home Connect				
Telescopic Rail				
Multi Point Temperature Probe				
Single Point Meat Probe				
Rapid heat up	●	●	●	●
Baking and roasting assistant				
FEATURES				
Electronic clock / timer	●	●	●	●
Full glass inner door	●	●	●	●
Glazed door (Quadruple / Triple/Double)	Double	Double	Double	Double
Internal lighting	LED Light	LED Light	LED Light	LED Light
Water tank empty indicator				
COOKING FUNCTIONS	2 heating mode	2 heating mode	1 heating mode	1 heating mode
FullSteam 100% / Intensive Steam				
Circo Therm® with Added Steam				
Dough Proving with Added Steam				
Keep Warm with Added Steam				
Reheat with Added Steam				
Sous-vide cooking				
Circo Therm®				
Circo Therm® Gentle / Top / bottom heat Gentle				
Bottom heat				
Conventional heat / Conventional heat gentle				
Low temperature cooking / Pre-heating				
Circo Roasting / Hot air grilling				
Full surface grill / Centre Surface Grill	●/	●/		
Bread Baking Function / Pizza setting / Dough proving				
Defrost / Plate warming / Keep warm				
Microwave Power Settings W	90, 180, 360, 600, 900	90, 180, 360, 600, 900	90, 180, 360, 600, 900	90, 180, 360, 600, 900
Microwave Cooking Programmes	3 Defrost / 4 Cooking	3 Defrost / 4 Cooking	3 Defrost / 4 Cooking	3 Defrost / 4 Cooking
OVEN CLEANING				
Pyrolytic cleaning				
Easy Clean® / Base Clean	●/●	●/●	●/●	●/●
Eco Clean Surface				
Cleaning setting	●	●	●	●
Descaling programme				
ENERGY EFFICIENCY[1]				
Energy efficiency class				
Energy consumption per cycle Circo Therm® kWh				
Energy consumption per cycle conventional kWh				
Oven capacity L	21	21	21	21
Time to cook standard load mins				
Largest baking sheet area cm^2				
TECHNICAL INFORMATION				
Total connected load kW	1.99	1.99	1.22	1.22

1 Measured according the EN50304, 65/2014. 2 For further information on inverter technology, please go to www.neffhome.com/uk. 3For Inverter models, the maximum setting offers a time limited boost option for heating liquids. To ensure optimal results and to protect the appliance, the microwave power output is reduced in stages over the first few minutes down to the next power level (600W). After a cooling period, the microwave boost option will be available once more.

N50
Single Ovens

- Dial Control & LCD Screen on all models
- All ovens feature Circo Therm®

	60CM SLIDE & HIDE® SINGLE OVEN			60CM SLIDE & HIDE® SINGLE OVEN		60CM SINGLE OVEN - DROP DOWN DOOR	
	PYROLYTIC/FIXED HANDLE B6ACH7HG0B | N50	PYROLYTIC/FIXED HANDLE B6ACH7HH0B | N50	FIXED HANDLE B3ACE4HG0B | N50	FIXED HANDLE B3ACE4HN0B | N50	ROTATING HANDLE B4ACF1AN0B | N50	PYROLYTIC B2ACH7HH0B | N50	B1ACE4HN0B | N50
	• 8 functions • Electronic, LCD display • 1 ClipRail • Fixed handle • Graphite Grey	• 8 functions • Electronic, LCD display • 1 ClipRail • Fixed handle • Stainless Steel	• 7 functions • LCD display • 1 ClipRail • Fixed handle • Graphite Grey	• 7 functions • LCD display • 1 ClipRail • Fixed handle • Stainless Steel	• 6 functions • LCD display • Rotating handle • Stainless Steel	• 8 functions • Electronic, LCD display • 1 ClipRail • Stainless Steel	• 6 functions • LCD display • 1 ClipRail • Stainless Steel
OPERATION							
NEFF Design Retractable controls	●	●	●	●	●	●	●
CONTROLS							
Electronic control	●	●				●	
Temperature proposal with display	● / ●	● / ●				● / ●	
Heating up indicator / Residual heat indicator	● / ●	● / ●	● /	● /	● /	● / ●	● /
Control panel lock / Safety switch off	● / ●	● / ●	● /	● /	● /	● / ●	● /
Automatic programmes							
SPECIAL FEATURES							
Door type	Slide & Hide® with Fixed Handle	Slide & Hide® with Fixed Handle	Slide & Hide® with Fixed Handle	Slide & Hide® with Fixed Handle	Slide & Hide® with Rotating Handle	Drop Down Door	Drop Down Door
Soft open door							
Oven Assistant with Voice Control							
Home Connect	●	●				●	
Telescopic Rail	1 x Clip rail	1 x Clip rail	1 x Clip rail	1 x Clip rail		1 x Clip rail	1 x Clip rail
Multi Point Temperature Probe							
Single Point Meat Probe							
Rapid heat up							
Baking and roasting assistant							
FEATURES							
Electronic clock / timer	White LCD Display	White LCD Display	White LCD Display	White LCD Display	White LCD Display	White LCD Display	White LCD Display
Full glass inner door	●	●	●	●	●	●	●
Glazed door (Quadruple / Triple / Double)	Quadruple	Quadruple	Triple	Triple	Triple	Quadruple	Double
Internal lighting	1 x 25W Halogen	1 x 25W Halogen	1 x 25W Halogen	1 x 25W Halogen	1 x 25W Halogen	1 x 25W Halogen	1 x 25W Halogen
Water tank empty indicator							
COOKING FUNCTIONS	14	14	14	14	14	14	14
Circo Therm®	3D	3D	3D	3D	3D	3D	3D
Circo Therm® Gentle / Top/bottom heat Gentle	● /	● /	● /	● /	● /	● /	● /
Top/bottom heat / Bottom heat	● / ●	● / ●	● / ●	● / ●	● / ●	● / ●	● /
Circo Roasting	●	●	●	●	●	●	●
Full surface grill/ Centre Surface Grill	● /	● /	● /	● /	● /	● /	● /
Bread baking	●	●				●	
Low temperature cooking							
Pizza setting/ Circo Therm® Intensive	●	●	●	●	●	●	●
Defrost							
Dough Proving							
Plate warming/ Keep Warm							
OVEN CLEANING							
Pyrolytic cleaning	●	●				●	
Easy Clean® / Base Clean	● /	● /	● /	● /		● /	● /
Eco Clean Surface			back	back	back		back
Cleaning setting	●	●				●	
Descaling programme							
STANDARD ACCESSORIES							
Universal pan	1	1	1	1	1	1	1
Steam Container							
Wire shelf	2	2	2	2	2	2	2
ENERGY EFFICIENCY[1]							
Energy efficiency class	A	A	A	A	A	A	A
Energy consumption per cycle Circo Therm® kWh	0.81	0.81	0.81	0.81	0.81	0.81	0.81
Energy consumption per cycle conventional kWh	1.04	1.04	1.04	1.04	1.04	0.99	0.97
Oven capacity L	71	71	71	71	71	71	71
Time to cook standard load mins	58	58	58	58	58	50	44
Largest baking sheet area cm^2	1290	1290	1290	1290	1290	1290	1290
TECHNICAL INFORMATION							
Total connected load kW	2.9	2.9	2.9	2.9	2.9	2.9	2.9

1 Measured according the EN50304, 65/2014. 2 For further information on inverter technology, please go to www.neffhome.com/uk. 3For Inverter models, the maximum setting offers a time limited boost option for heating liquids. To ensure optimal results and to protect the appliance, the microwave power output is reduced in stages over the first few minutes down to the next power level (600W). After a cooling period, the microwave boost option will be available once more.

N50 Compact Ovens with Microwave

- Dial Control & LCD Screen on all models

45CM COMPACT OVENS

	WITH MICROWAVE C1AMG84G0B | N50	WITH MICROWAVE C1AMG84N0B | N50
	• 3 functions • Electronic, LCD Display • MW & Oven with combination options • 15 automatic programmes • Graphite Grey	• 3 functions • Electronic, LCD Display • MW & Oven with combination options • 15 automatic programmes • Stainless Steel
OPERATION		
Premium Full Touch TFT Display Type		
Screen Size		
NEFF Design Retractable controls	●	●
CONTROLS		
Electronic control	●	●
Temperature proposal with Display		
Heating up indicator/ Safety switch off	/ ●	/ ●
Automatic programmes	15	15
SPECIAL FEATURES		
Home Connect		
Door Type	Drop Down Door	Drop Down Door
Soft close / open door		
Telescopic Rail		
MultiPoint Temperature Probe		
Baking and roasting assistant		
FEATURES		
Display Type	White LCD display	White LCD display
Full glass inner door		
Glazed door (Quadruple/Triple/Double)	Triple	Triple
Internal lighting	1 x 1W LED	1 x 1W LED
COOKING FUNCTIONS		
Hot Air	●	●
Hot Air Gentle		
Top/bottom heat		
Conventional heat Eco		
Fan & Grill	●	●
Full surface grill/ Centre surface grill	● /	● /
Bread baking		
Bottom heat		
Low temperature cooking		
Pizza setting/ Circo Therm® Intensive	●	●
Defrost		
Dough Proving		
Plate warming/ Keep warm		
Microwave	●	●
Microwave combinable	●	●
OVEN CLEANING		
Pyrolytic cleaning		
Easy Clean®/ Base Clean		
Eco Clean Surfaces		
Cleaning setting		
STANDARD ACCESSORIES		
Wire shelf	1	1
Universal pan		
Ceramic Glass Base	●	●
STANDARD ACCESSORIES		
Energy efficiency index		
Energy efficiency class		
Energy consumption per cycle Circo Therm® kWh		
Energy consumption per cycle conventional kWh		
Oven capacity (L)	44	44
Time to cook standard load mins		
Largest baking sheet area cm^2		
TECHNICAL INFORMATION		
Total connected load kW	3.3	3.3

N50 Compact Microwaves

38CM MICROWAVES

	900W HLAWD53N0B | N50	800W HLAWD23G0B | N50	800W HLAWD23N0B | N50
	• Up to 900W • 25L • 5 power levels • Electronic, white LED display • Stainless Steel	• Up to 800W • 25L • 5 power levels • Electronic, white LED display • Graphite Grey	• Up to 800W • 25L • 5 power levels • Electronic, white LED display • Stainless Steel
OPERATION			
Retractable control with push buttons	●	●	●
Control panel position	Right, vertical	Right, vertical	Right, vertical
FUNCTIONS			
Microwave	●	●	●
Quartz Grill			
Microwave & grill combination			
FEATURES			
Installation position	Tall housing	Wall unit or Tall housing	Wall unit or Tall housing
Full width frameless design	●	●	●
Electronic Clock	White LED display	White LED display	White LED display
ClearText Display			
Automatic programmes	7	7	7
Memory settings	1	1	1
Maximum cooking time duration (mins)	99	99	99
Electronic door opening			
Push button door opening	●	●	●
Hinge	Left	Left	Left
Internal light	1 x 3W LED	1 x 3W LED	1 x 3W LED
Stainless steel interior	●	●	●
STANDARD ACCESSORIES			
Glass turntable	1	1	1
Glass pan / Wire Grid			
TECHNICAL INFORMATION			
Appliance Dimensions HxWxD mm	382 x 594 x 388	382 x 594 x 317	382 x 594 x 317
Cavity Dimensions HxWxD mm	208 x 328 x 369	201 x 308 x 282	201 x 308 x 282
Oven capacity L	25	20	20
Inverter technology[1]			
Maximum power Microwave[2] W	900	800	800
Number of Microwave power levels	5	5	5
Mircrowave distrbution	Turntable	Turntable	Turntable
Turntable diameter mm	315	255	255
Total connected load kW	1.4	1.2	1.2
Minimum fuse protection Amps	10	10	10
Cable length cm	130	130	130
GB plug	●	●	●

1 Measured according the EN50304, 65/2014. 2 For further information on inverter technology, please go to www.neffhome.com/uk. 3For Inverter models, the maximum setting offers a time limited boost option for heating liquids. To ensure optimal results and to protect the appliance, the microwave power output is reduced in stages over the first few minutes down to the next power level (600W). After a cooling period, the microwave boost option will be available once more.

N50 Double Ovens & Built-Under Double Ovens

- Dial Control & LCD Screen on all models
- All ovens feature a Circo Therm® Main Oven

DOUBLE OVENS

PYROLYTIC U2ACM7HG0B | N50

- 8 functions
- 1 ClipRail
- MeatProbe
- 2nd oven 4 functions
- Electronic, LCD display
- Pyrolytic for both ovens
- Graphite Grey

PYROLYTIC U2ACM7HH0B | N50

- 8 functions
- 1 ClipRail
- MeatProbe
- 2nd oven 4 functions
- Electronic, LCD display
- Pyrolytic for both ovens
- Stainless Steel

DESIGN				
NEFF Design Retractable controls	●	●	●	●
Electronic clock / timer	White LCD display		White LCD display	
ELECTRONIC CONTROL	Main	2nd	Main	2nd
Temperature display	●	●	●	●
Heating up indicator	●	●	●	●
Residual heat indicator	●	●	●	●
Temperature proposal	●	●	●	●
SPECIAL FEATURES	Main	2nd	Main	2nd
Door type	Drop Down Door	Drop Down Door	Drop Down Door	Drop Down Door
Home Connect	●	●	●	●
Electronic control	●	●	●	●
Telescopic Rails	1 x Clip Rail		1 x Clip Rail	
Standard Meat Probe	●		●	
FEATURES	Main	2nd	Main	2nd
Control panel lock	●	●	●	●
Full glass inner door	●	●	●	●
Safety switch off	●	●	●	●
Internal lighting	1 x 25W halogen	1 x 25W halogen	1 x 25W halogen	1 x 25W halogen
Number of shelf positions	4	3	4	3
Glazed door (Quadruple/Triple/Double)	Quadruple	Quadruple	Quadruple	Quadruple
COOKING FUNCTIONS	Main	2nd	Main	2nd
Circo Therm®	3D		3D	
Circo Therm® Gentle	●		●	
Top/bottom heat	●	●	●	●
Circo Roasting	●		●	
Full surface grill	●	●	●	●
Centre surface grill		●		●
Bread baking	●		●	
Bottom heat	●	●	●	●
Pizza Setting / Circo Therm® Intensive	●		●	
Rapid heat	●		●	
OVEN CLEANING	Main	2nd	Main	2nd
Pyrolytic Cleaning	●	●	●	●
Easy Clean®	●		●	
Eco Clean liners (Roof/Back/Sides)				
Base clean				
Cleaning setting	●	●	●	●
STANDARD ACCESSORIES	Main	2nd	Main	2nd
Wire shelves	3		3	
Universal pan	1		1	
ENERGY EFFICIENCY[1]	Main	2nd	Main	2nd
Energy efficiency index	95.3	120.3	95.3	120.3
Energy efficiency class	A	B	A	B
Energy consumption per cycle Circo Therm® (kWh)	0.75		0.75	
Energy consumption per cycle conventional (kWh)	1.00	0.83	1.00	0.83
Oven capacity (L)	71	34	71	34
Time to cook standard load (mins)	44	44	44	44
Largest baking sheet area (cm^2)	1290		1290	
TECHNICAL INFORMATION				
Total connected load kW	6.3		6.3	

DOUBLE OVENS / BUILT-UNDER DOUBLE OVEN

ECO CLEAN BOTH OVENS U1ACE5HN0B | N50

- 6 functions
- 1 ClipRail
- LCD display
- 2nd oven 4 functions
- Eco Clean roof, back and sides for both ovens
- Stainless Steel

U1ACE2HG0B | N50

- 5 functions
- 1 ClipRail
- LCD display
- 2nd oven 4 functions
- Graphite Grey

U1ACE2HN0B | N50

- 5 functions
- 1 ClipRail
- LCD display
- 2nd oven 4 functions
- Stainless Steel

J1ACE2HN0B | N50

- 6 functions
- 1 ClipRail
- LCD display
- 2nd oven 3 functions
- Stainless Steel

DESIGN								
NEFF Design Retractable controls	●	●	●	●	●	●	●	●
Electronic clock / timer	White LCD display		White LCD display		White LCD display		White LCD display	
ELECTRONIC CONTROL	Main	2nd	Main	2nd	Main	2nd	Main	2nd
Temperature display								
Heating up indicator	●		●		●		●	
Residual heat indicator								
Temperature proposal								
SPECIAL FEATURES	Main	2nd	Main	2nd	Main	2nd	Main	2nd
Door type	Drop Down Door	Drop Down Door	Drop Down Door	Drop Down Door	Drop Down Door	Drop Down Door	Drop Down Door	Drop Down Door
Home Connect								
Electronic control								
Telescopic Rails	1 x Clip Rail		1 x Clip Rail		1 x Clip Rail		1 x Clip Rail	
Standard Meat Probe								
FEATURES	Main	2nd	Main	2nd	Main	2nd	Main	2nd
Control panel lock	●		●		●		●	
Full glass inner door	●	●	●	●	●	●	●	●
Safety switch off								
Internal lighting	1 x 25W halogen	1 x 25W halogen	1 x 25W halogen	1 x 25W halogen	1 x 25W halogen	1 x 25W halogen	1 x 25W halogen	1 x 25W halogen
Number of shelf positions	4	3	4	3	4	3	3	3
Glazed door (Quadruple/Triple/Double)	Double	Triple	Double	Double	Double	Double	Double	Triple
COOKING FUNCTIONS	Main	2nd	Main	2nd	Main	2nd	Main	2nd
Circo Therm®	3D		3D		3D		3D	
Circo Therm® Gentle	●		●		●		●	
Top/bottom heat	●	●	●	●	●	●	●	●
Circo Roasting	●		●		●		●	
Full surface grill	●	●	●	●	●	●	●	●
Centre surface grill		●		●		●		●
Bread baking								
Bottom heat		●		●		●		●
Pizza Setting / Circo Therm® Intensive	●						●	
Rapid heat	●		●		●		●	
OVEN CLEANING	Main	2nd	Main	2nd	Main	2nd	Main	2nd
Pyrolytic Cleaning								
Easy Clean®	●		●		●		●	
Eco Clean liners (Roof/Back/Sides)	roof/back/sides	roof/back/sides						
Base clean								
Cleaning setting								
STANDARD ACCESSORIES	Main	2nd	Main	2nd	Main	2nd	Main	2nd
Wire shelves	3		3		3		2	
Universal pan	1		1		1		1	
ENERGY EFFICIENCY[1]	Main	2nd	Main	2nd	Main	2nd	Main	2nd
Energy efficiency index	95.3	120.3	95.3	120.3	95.3	120.3	94.7	120.3
Energy efficiency class	A	B	A	B	A	B	A	B
Energy consumption per cycle Circo Therm® (kWh)	0.78	-	0.75		0.75		0.64	
Energy consumption per cycle conventional (kWh)	0.93	0.83	1.00	0.83	1.00	0.83	0.84	0.83
Oven capacity (L)	71	34	71	34	71	34	47	34
Time to cook standard load (mins)	44	44	44	44	44	44	45	45
Largest baking sheet area (cm^2)	1290		1290		1290		1290	
TECHNICAL INFORMATION								
Total connected load kW	5.9		5.9		5.9		5.3	

[1] Measured according the EN50304, 65/2014. [2] For further information on inverter technology, please go to www.neffhome.com/uk. [3]For Inverter models, the maximum setting offers a time limited boost option for heating liquids. To ensure optimal results and to protect the appliance, the microwave power output is reduced in stages over the first few minutes down to the next power level (600W). After a cooling period, the microwave boost option will be available once more.

Warming Drawers & Accessory

	29CM WARMING DRAWERS		14CM WARMING DRAWERS	14CM WARMING DRAWERS	14CM ACCESSORY DRAWERS	29CM WARMING DRAWERS	14CM WARMING DRAWERS	
	N34HA11G1B N90 / N70	**N34HA11N1B N90 / N70**	**N24HA11G1B N90 / N70**	**N24HA11N1B N90 / N70**	**N24ZA11G1 N90 / N70**	**N1AHA02N0B N50**	**N1AHA01G0B N50**	**N1AHA01N0B N50**
	• 29cm high • Electronic touch control warming drawer • 4 settings or 6 selectable temperature settings • Timer • Heated ceramic base • Push/pull opening • Graphite Grey	• 29cm high • Electronic touch control warming drawer • 4 settings or 6 selectable temperature settings • Timer • Heated ceramic base • Push/pull opening • Graphite Grey	• 14cm high • Electronic touch control warming drawer • 4 settings or 6 selectable temperature settings • Timer • Heated ceramic base • Push/pull opening • Graphite Grey	• 14cm high • Electronic touch controlwarming drawer • 4 settings or 6 selectable temperature settings • Timer • Heated ceramic base • Push/pull opening • Graphite Grey	• 14cm high • Accessory drawer • Push/pull opening • Graphite Grey	• 29cm high • Warming drawer • 3 settings • Push-pull opening • Stainless Steel	• 14cm high • Warming drawer • 3 settings • Push-pull opening • Stainless Steel	• 14cm high • Warming drawer • 3 settings • Push-pull opening • Stainless Steel
FUNCTIONS								
Plate warming	●	●	●	●		●	●	●
Hold Warm	●	●	●	●		●	●	●
Defrost	●	●	●	●		●	●	●
Low temperature cooking	●	●	●	●				
Accessory drawer					●			
FEATURES								
Home Connect	●	●	●	●				
Operating indicator light	●	●	●	●		●	●	●
Electronic control	●	●	●	●				
Rotary temperature control dial						●	●	●
Touch control	●	●	●	●				
Number of temperature settings	4	4	4	4		3	3	3
Maximum temperature	80	80	80	80		80	80	80
Minimum temperature	30	30	30	30		40	40	40
Ceramic Glass Base	●	●	●	●				
DESIGN								
Install independently	●	●	●	●	●	●	●	●
Install with compact appliance	N70 / N90	N70 / N90	N70 / N90	N70 / N90	N70 / N90	N50	N50	N50
Install with a single oven	N70 / N90	N70 / N90	N70 / N90	N70 / N90	N70 / N90	N50	N50	N50
Push-Pull opening mechanism	●	●	●	●	●	●	●	●
TECHNICAL INFORMATION								
Drawer interior volume L	54	54	20	20	21	58	23	23
Interior drawer dimensions HxWxD mm	290x594x518mm	290x594x518mm	140x594x518	140x594x518	140x594x518	250x475x490	100x475x490	100x475x490
Vacuum chamber dimensions HxWxD mm								
Installation in tall housing or under work surface	●	●	●	●	●	●	●	●
Maximum weight capacity	25	25	25	25	15	15	15	15
Total connected loading kW	0.82	0.82	0.82	0.82		0.40	0.40	0.40
Minimum fuse rating	10	10	10	10		6	6	6
Cable length	175	175	170	170		150	150	150
GB plug	●	●	●	●		●	●	●
STANDARD ACCESSORIES								
Vacuuming platform								
External vacuuming adaptor, hose & plugs								
Sample vacuuming bags								
Antislip mat					●	●	●	●

1 Measured according the EN50304, 65/2014. 2 For further information on inverter technology, please go to www.neffhome.com/uk. 3For Inverter models, the maximum setting offers a time limited boost option for heating liquids. To ensure optimal results and to protect the appliance, the microwave power output is reduced in stages over the first few minutes down to the next power level (600W). After a cooling period, the microwave boost option will be available once more.

N90 60cm Single Ovens with Steam

B64VT73G0B, B64VS71G0B, B64FT53G0B, B64FS31G0B

Installing two appliances on top of each other
Air exchange

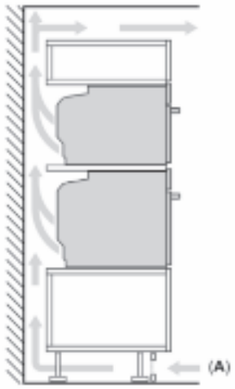

A: Air inlet ≥ 200 cm²

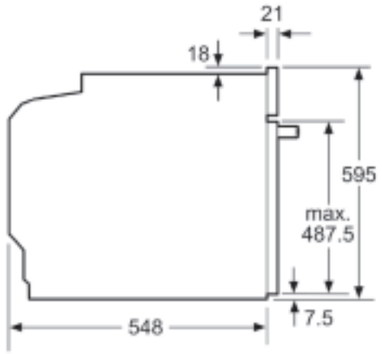

If the appliance will be installed underneath a hob, the following worktop thicknesses (including substructure if necessary) must be taken into account.

Hob type	min. worktop thickness	
	fitted	flush
Induction hob	37 mm	38 mm
Full surface Induction hob	47 mm	48 mm
Gas hob	30 mm	38 mm
Electric hob	27 mm	30 mm

measurements in mm

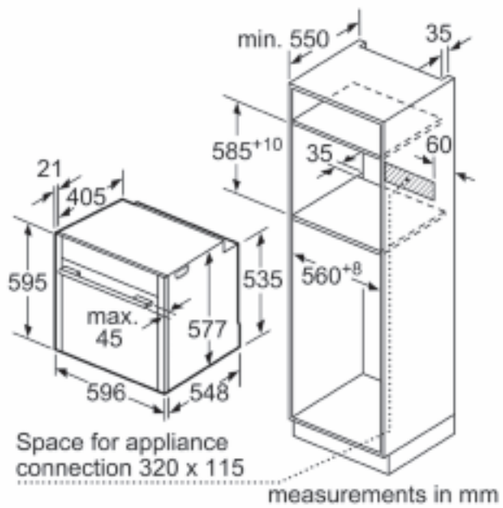

measurements in mm

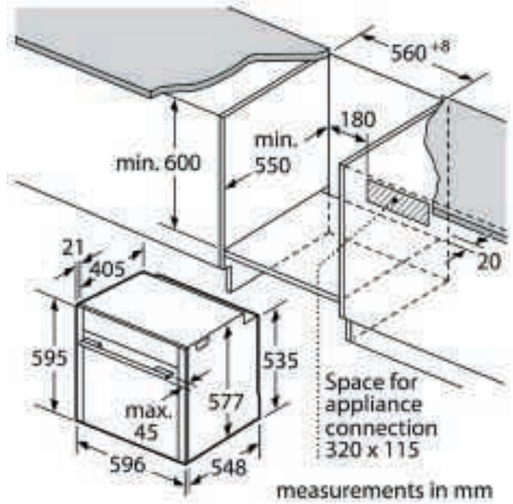

measurements in mm

N90 / N70 60cm Single Ovens

B64CS71G0B, B64CT73G0B, B54CR71G0B, B54CR71N0B, B64CS51G0B, B54CR31G0B, B54CR31N0B, B24CR31G0B, B24CR71G0B

Installing two appliances on top of each other
Air exchange

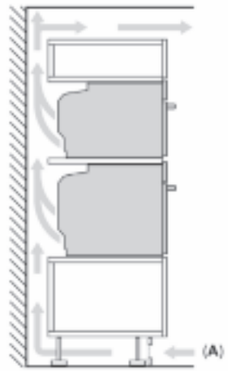

A: Air inlet ≥ 200 cm²

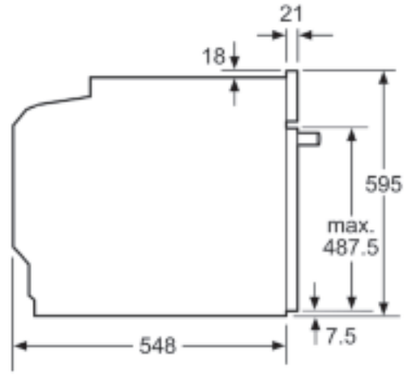

If the appliance will be installed underneath a hob, the following worktop thicknesses (including substructure if necessary) must be taken into account.

Hob type	min. worktop thickness	
	fitted	flush
Induction hob	37 mm	38 mm
Full surface Induction hob	47 mm	48 mm
Gas hob	30 mm	38 mm
Electric hob	27 mm	30 mm

measurements in mm

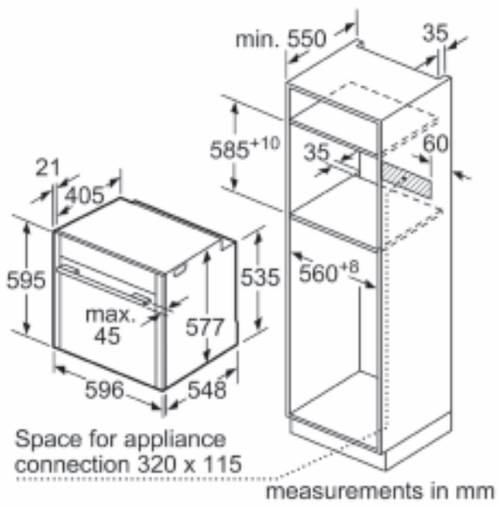

measurements in mm

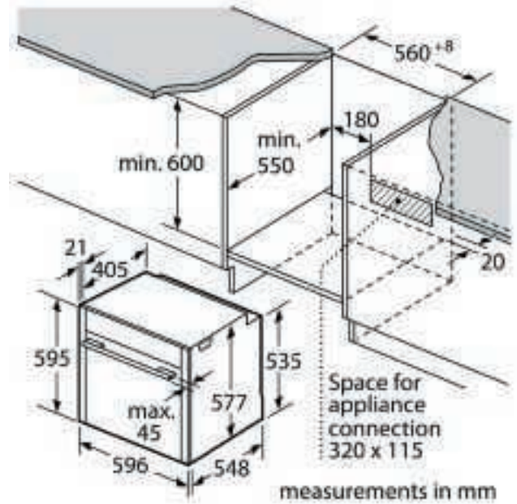

measurements in mm

B64CS71G0B, B54CR71G0B, B54CR71N0B, B64CS51G0B, B54CR31G0B, B54CR31N0B

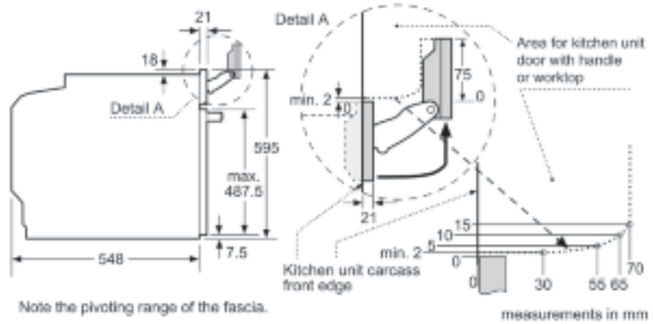

Note the pivoting range of the fascia.

measurements in mm

Measurements in mm. The line drawings featured in this brochure are provided as a guide to general dimensions only and are subject to amendment without prior notice.
For full dimensional and installation details please refer to the documentation supplied with the appliance.

Measurements in mm. The line drawings featured in this brochure are provided as a guide to general dimensions only and are subject to amendment without prior notice.
For full dimensional and installation details please refer to the documentation supplied with the appliance.

N50 60cm Single Ovens

B6ACH7HG0B, B6ACH7HH0B, B4ACF1AN0B, B3ACE4HG0B, B3ACE4HN0B, B1ACE4HN0B, B2ACH7HH0B

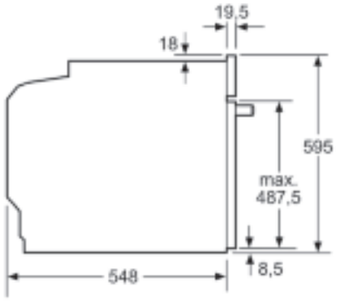

measurements in mm

Installation with a hob.

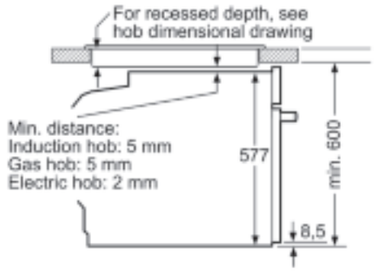

measurements in mm

If the appliance will be installed underneath a hob, the following worktop thicknesses (including substructure if necessary) must be taken into account.

Hob type	min. worktop thickness	
	fitted	flush
Induction hob	37 mm	38 mm
Full surface Induction hob	47 mm	48 mm
Gas hob	30 mm	38 mm
Electric hob	27 mm	30 mm

A: Air inlet ≥ 200 cm²

Measurements in mm

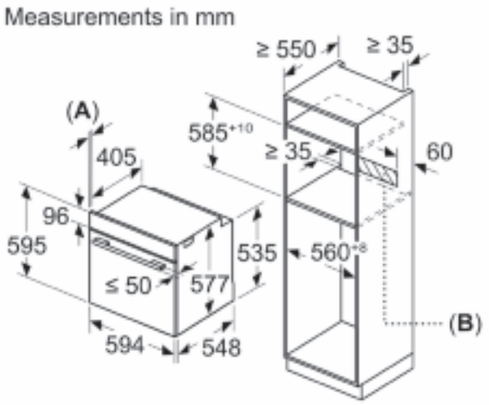

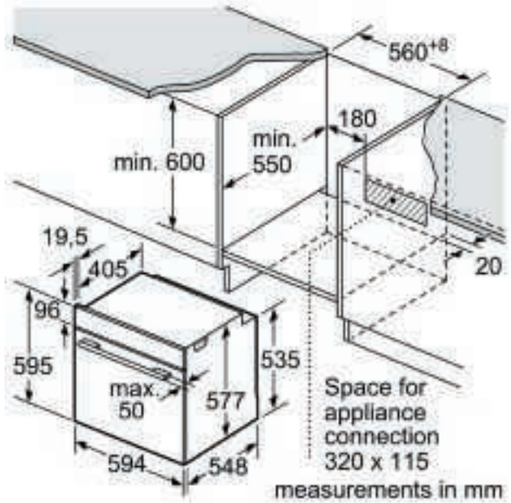

measurements in mm

A: 19.5 mm
B: Space for appliance connection 320 x 115 mm

N50 Double Ovens

U2ACM7HG0B, U2ACM7HH0B, U1ACE5HN0B, U1ACE2HG0B, U1ACE2HN0B

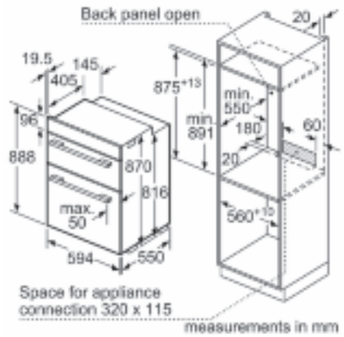

measurements in mm

measurements in mm

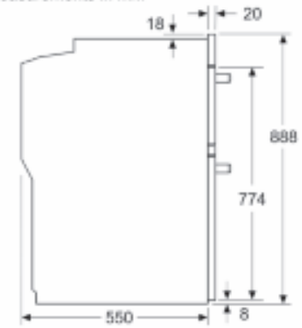

J1ACE2HN0B

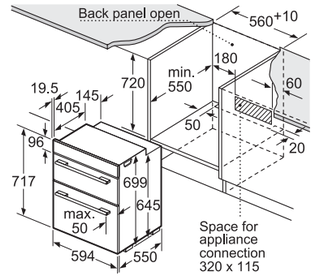

If the appliance will be installed underneath a hob, the following worktop thicknesses (including substructure if necessary) must be taken into account.

Hob type	min. worktop thickness	
	fitted	flush
Induction hob	39 mm	40 mm
Full surface induction hob	49 mm	50 mm
Gas hob	29 mm	40 mm
Electric hob	29 mm	32 mm

Measurements in mm
Installation with a cooktop

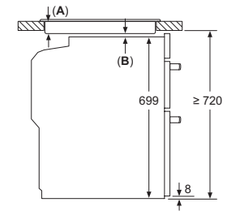

A: Recessed depth 29-50 mm. See cooktop dimensional drawing.
B: Clearance min.:
Induction cooktop: 5 mm
Gas cooktop: 5 mm
Electric cooktop: 2 mm

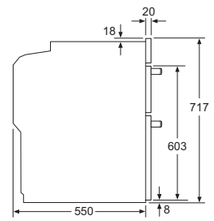

Measurements in mm. The line drawings featured in this brochure are provided as a guide to general dimensions only and are subject to amendment without prior notice.
For full dimensional and installation details please refer to the documentation supplied with the appliance.

Measurements in mm. The line drawings featured in this brochure are provided as a guide to general dimensions only and are subject to amendment without prior notice.
For full dimensional and installation details please refer to the documentation supplied with the appliance.

N90 45cm Compact Ovens with Steam

C24FT53G0B, C24FS31G0B

Installing two appliances on top of each other
Air exchange

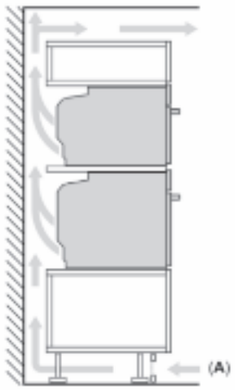

A: Air inlet ≥ 200 cm²

Installation with a hob.

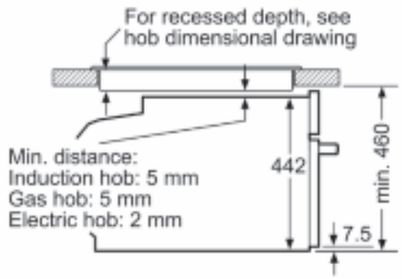

If the compact appliance will be installed underneath a hob, the following worktop thicknesses (including substructure if necessary) must be taken into account.

Hob type	min. worktop thickness	
	fitted	flush
Induction hob	42 mm	43 mm
Full surface Induction hob	52 mm	53 mm
Gas hob	32 mm	43 mm
Electric hob	32 mm	35 mm

measurements in m

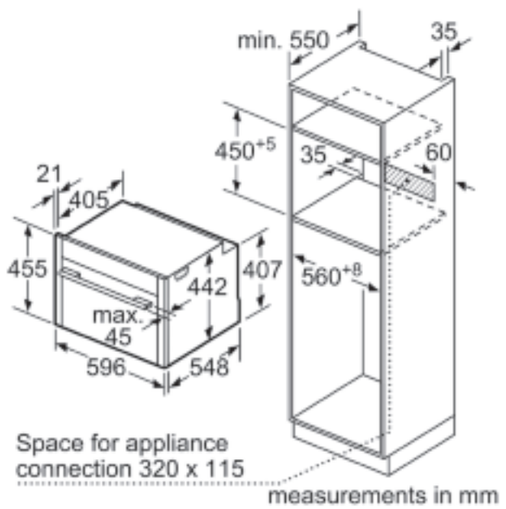

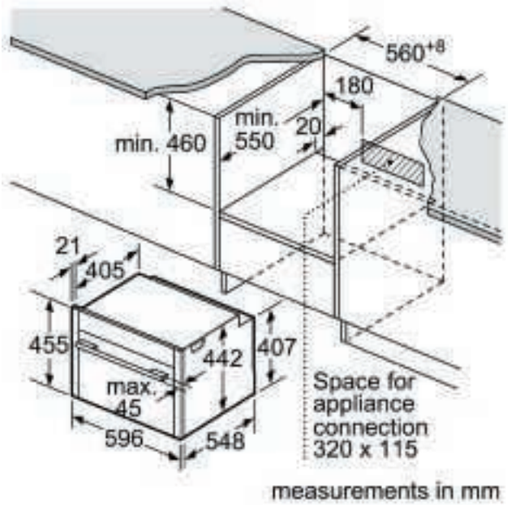

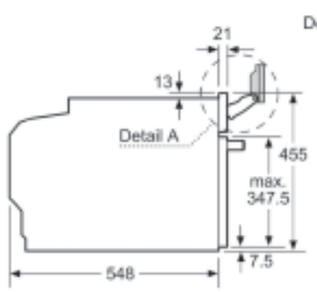

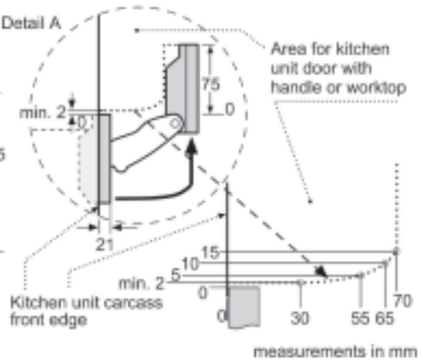

Note the pivoting range of the fascia.

Measurements in mm. The line drawings featured in this brochure are provided as a guide to general dimensions only and are subject to amendment without prior notice.
For full dimensional and installation details please refer to the documentation supplied with the appliance.

N90 / N70 45cm Compact Ovens with Microwave Function

C24MT73G0B, C24MS71G0B, C24MS31G0B, C24MR21G0B, C24MR21N0B, C24GR3XG1B

Installing two appliances on top of each other
Air exchange

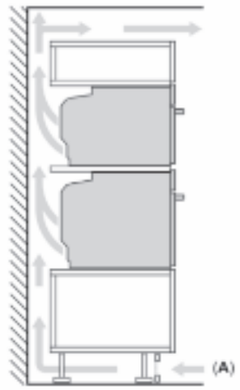

A: Air inlet ≥ 200 cm²

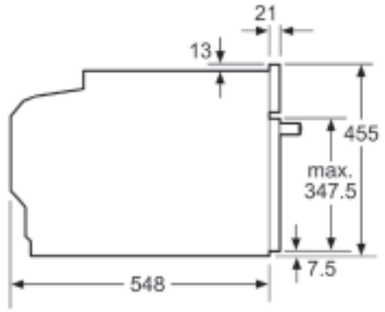

If the compact appliance will be installed underneath a hob, the following worktop thicknesses (including substructure if necessary) must be taken into account.

Hob type	min. worktop thickness	
	fitted	flush
Induction hob	42 mm	43 mm
Full surface Induction hob	52 mm	53 mm
Gas hob	32 mm	43 mm
Electric hob	32 mm	35 mm

measurements in m

Measurements in mm

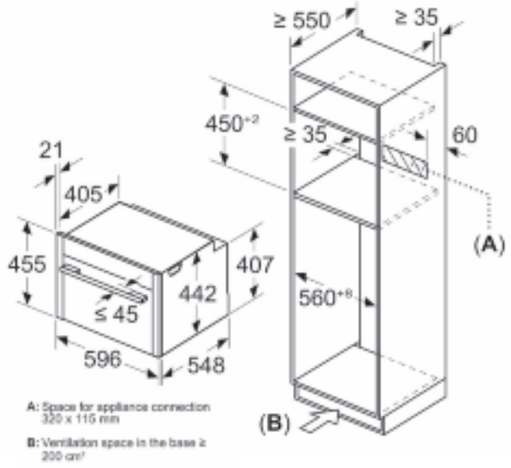

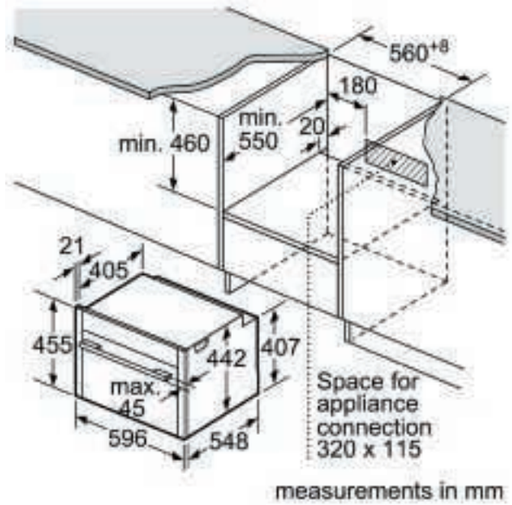

Installation with a hob.

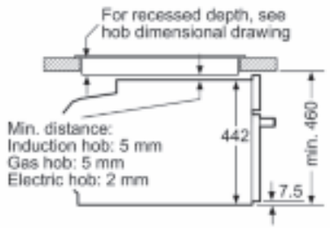

measurements in mm

Measurements in mm. The line drawings featured in this brochure are provided as a guide to general dimensions only and are subject to amendment without prior notice.
For full dimensional and installation details please refer to the documentation supplied with the appliance.

N90 45cm Coffee Machine

CL4TT11G0

Measurements in mm

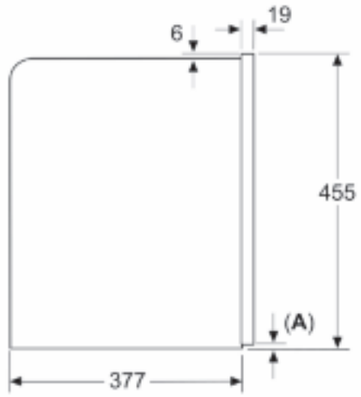

A: 7.5 mm

Measurements in mm

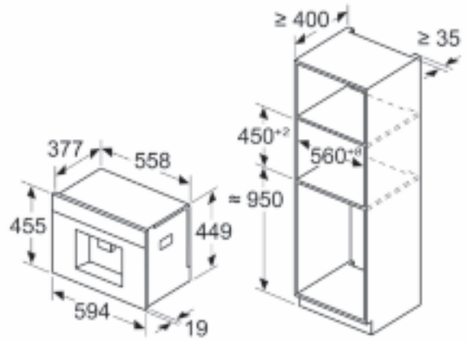

Bean and water containers are removed from the front
Recommended installation height 950–1450 mm

Measurements in mm

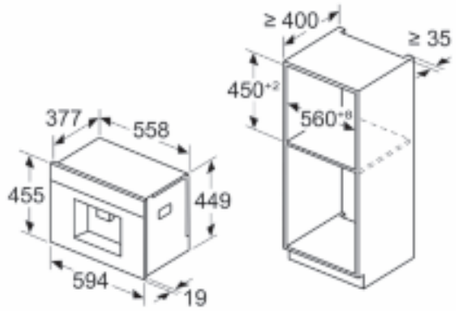

Bean and water containers are removed from the front
Recommended installation height 950–1450 mm

Measurements in mm
Left corner installation

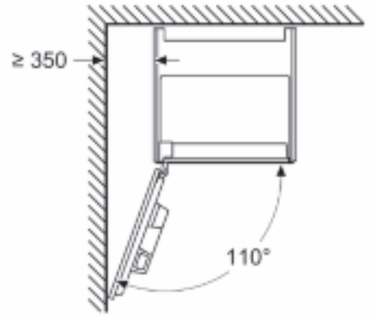

If using the 92° hinge limiter, the min. distance to the wall is only 100 mm

Measurements in mm

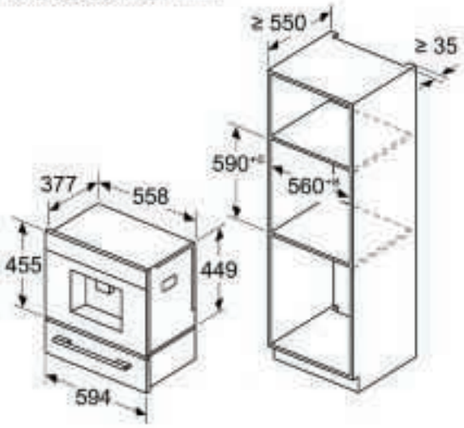

Measurements in mm. The line drawings featured in this brochure are provided as a guide to general dimensions only and are subject to amendment without prior notice.
For full dimensional and installation details please refer to the documentation supplied with the appliance.

N50 45cm Microwave Ovens

C1AMG84G0B, C1AMG84N0B

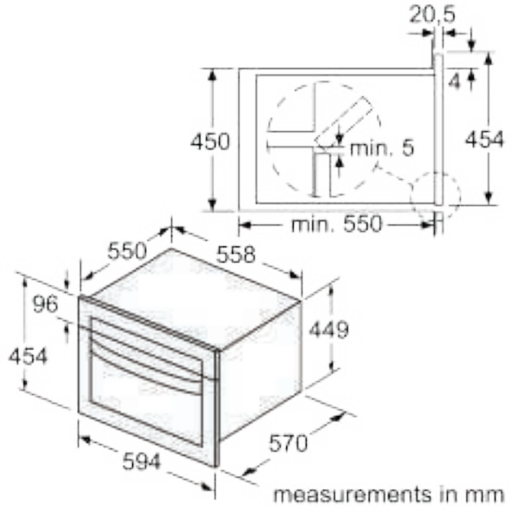

measurements in mm

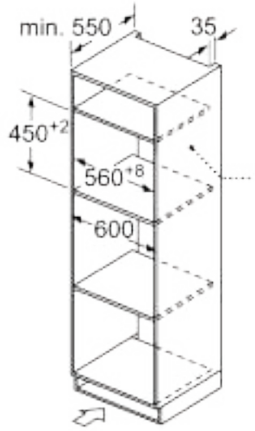

Ventilation space in the base min. 50 cm²

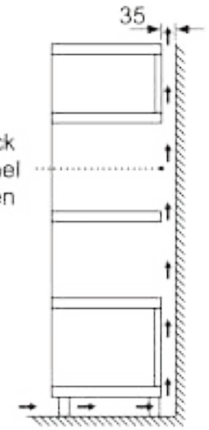

measurements in mm

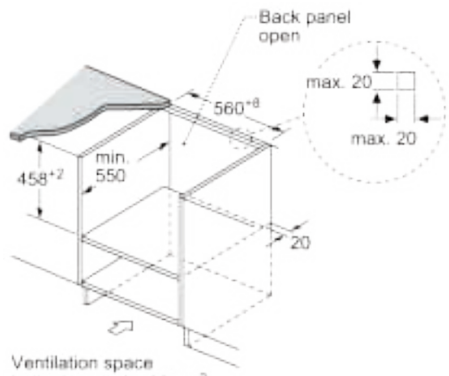

Ventilation space in the base min. 50 cm²

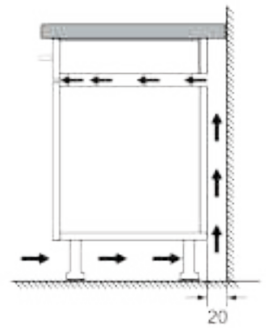

measurements in mm

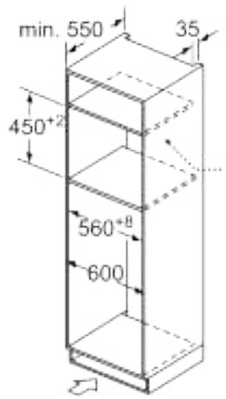

Back panel open

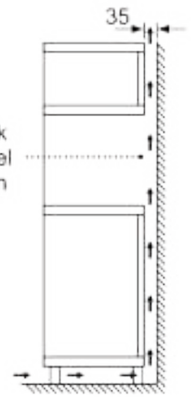

Ventilation space in the base min. 50 cm²

measurements in mm

Measurements in mm. The line drawings featured in this brochure are provided as a guide to general dimensions only and are subject to amendment without prior notice.
For full dimensional and installation details please refer to the documentation supplied with the appliance.

N70 / N50 38cm Microwave Ovens

NL4GR31G1B, NR4GR31G1B, NL4WR21G1B, NR4WR21G1B

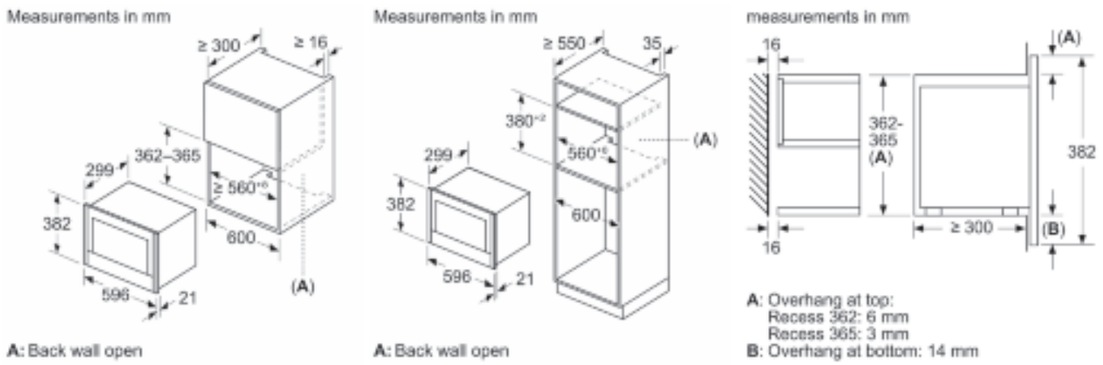

A: Back wall open

A: Back wall open

A: Overhang at top:
Recess 362: 6 mm
Recess 365: 3 mm
B: Overhang at bottom: 14 mm

HLAWD53N0B, HLAWD23G0B, HLAWD23G0B

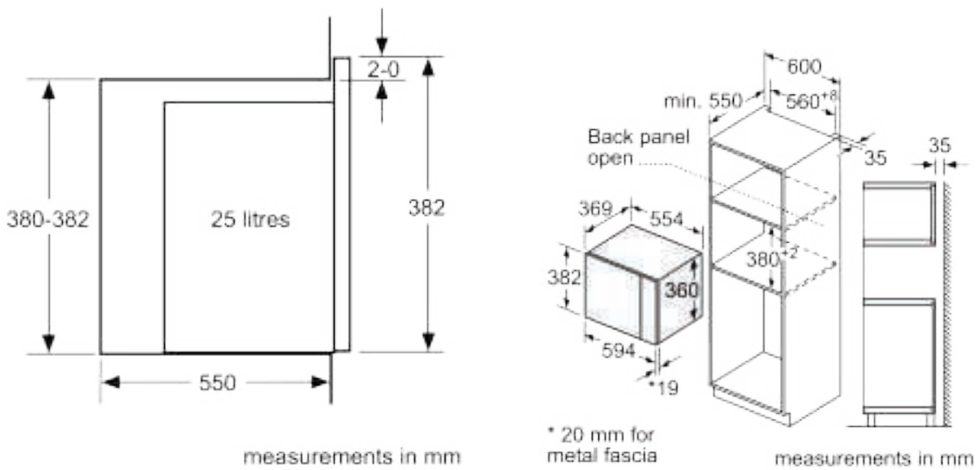

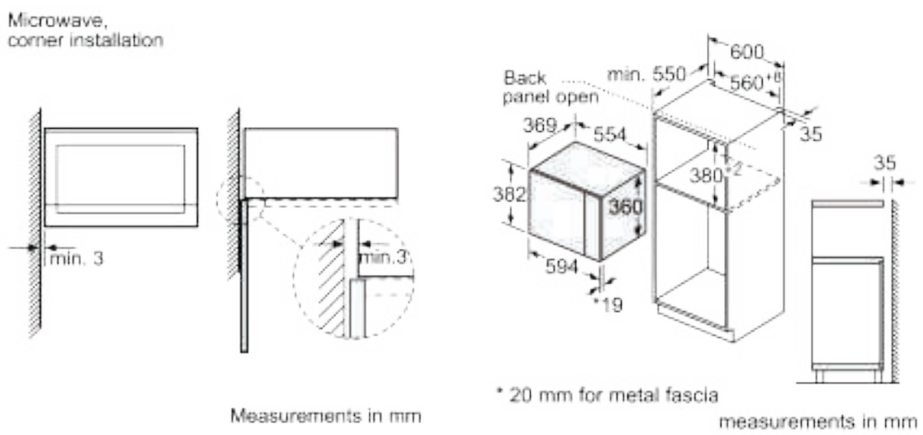

Warming Drawers

N34HA11G1B, N34HA11N1B

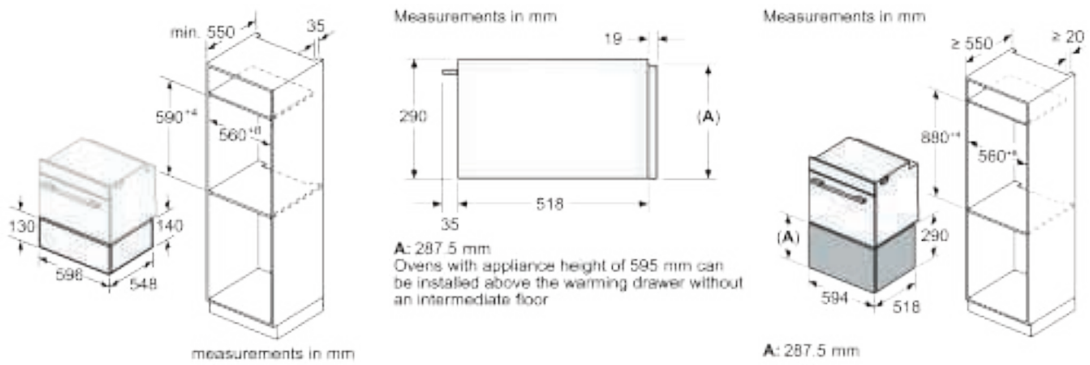

N24HA11G1B, N24HA11N1B

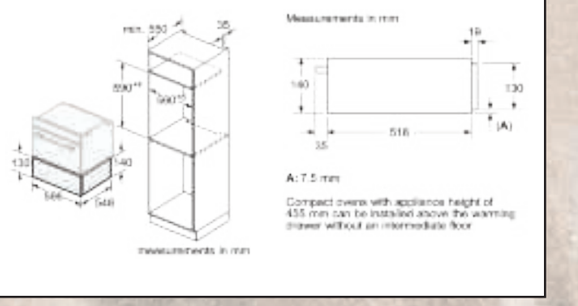

N24ZA11G1

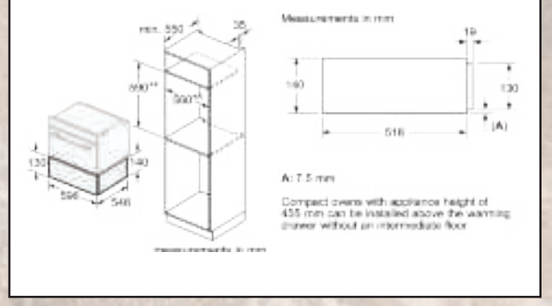

N1AHA02N0B

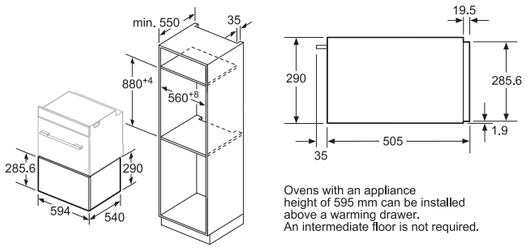

Ovens with an appliance height of 595 mm can be installed above a warming drawer.
An intermediate floor is not required.

N1AHA01N0B, N1AHA01G0B

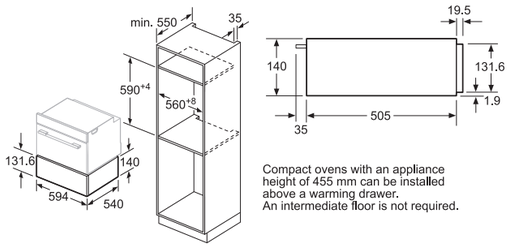

Compact ovens with an appliance height of 455 mm can be installed above a warming drawer.
An intermediate floor is not required.

Measurements in mm. The line drawings featured in this brochure are provided as a guide to general dimensions only and are subject to amendment without prior notice.
For full dimensional and installation details please refer to the documentation supplied with the appliance.

Measurements in mm. The line drawings featured in this brochure are provided as a guide to general dimensions only and are subject to amendment without prior notice.
For full dimensional and installation details please refer to the documentation supplied with the appliance.

NEFF HOB *Range*

The right hob for every cooking style

Cooking and kitchen design are all about creativity and individual taste and the NEFF range of surface cooking hobs have a broad range of hobs to suit all styles.

- The range includes electric models, for those that like a seamless glass top, or for those that still love gas cooking, our hobs come in a range of sizes and finishes, with some models featuring a large central wok burner.
- NEFF Electric Hobs
  - Venting Hobs – available in 80cm, 70cm and 60cm sizes.
  - Flex Induction Hobs – available in 90cm, 80cm and 60cm sizes.
  - Induction Hobs – available in 80cm and 60cm sizes, all finished in black glass.
  - Ceramic Hobs – available in 80cm and 60cm sizes.
- NEFF Gas Hobs – available in 90cm, 75cm, 60cm sizes, and a variety of finishes.
- All the NEFF hob range have a variety of installation styles to suit all kitchen designs.
- Venting Hobs can be installed as recirculated or vented out, with a variety of solutions.
- Certain flex induction hobs can be installed with our Glass Draft hood next to one another or seamlessly.
- There are a variety of options when it comes to control panels and how to operate. Adding Home Connect means the hob and an equivalent connected NEFF hood can link together via Hob Hood connection, so when the hob is turned on the hood will start automatically.

Your Guide To Hobs

Rethink cooking in NEFF's infinite kitchen

A great meal is all about the ingredients and cooking process. And it's the same when it comes to choosing the right hob. If you want flexibility, an electric Flex Induction hob might be what you're after. Or reclaim your space in the kitchen with our Venting Hob. With integrated ventilation you can install your hob on a kitchen island to create a sociable space when cooking. There's a NEFF hob for everyone to get creative with.

Venting Hobs

- The 2-in-1 Hob and Hood is here. With freedom from a conventional wall or island hood, our integrated cooktop ventilation allows you to reclaim your space in the kitchen. The NEFF Venting Hob is set to create the stylish and sociable kitchen you've always dreamt of.
- Our Venting Hobs offer maximum flexibility in installation options - Unducted, Partly Ducted, Fully Ducted & Ducted out.

Featured model:
V58PHQ4C0 N70 80cm Venting Hob with new Twist Touch® Control

Flex Induction Hobs

- For sociable cooks who often find themselves juggling multiple pans, a Flex Induction hob provides any size pan, anywhere cooking within the zones.
- When the zones are activated, pans will receive instant, even and rapid heat transference wherever they are placed. Our range of Flex Induction hobs are available with a number of controls either with a TFT touch screen or using a NEFF Anthracite Grey Twist Pad®.

Featured model:
T69FUV4L0 N90 90cm Flex induction hob with new Anthracite Grey Twist Pad®

Featured model:
T56FHS1L0 N70 60cm Induction Hob new Twist Touch® Control

Induction Hobs

- If sleek, stylish and clean lines are more in keeping with your kitchen design, our Induction hobs provide a minimalistic and premium look whilst providing a quick and responsive cooking surface.
- Cooking with an Induction Hob saves energy and is incredibly safe – there is little residual heat once the saucepan is removed from the hob.

Ceramic Hobs

- With their frameless design, our Ceramic hobs stand out in any kitchen, and a whole range of options with up to 17 power settings makes preparing the next feast as easy as pie.
- Better still, our enhanced touch control panel provides full flexibility over your cooking.

Featured model:
T16NBE1L N50 60cm Ceramic Hob

Featured model:
T27CS59S0 N70 75cm Gas Hob

Gas Hobs

- For traditionalists who prefer to see exactly how much heat is delivered to their pans, gas cooking provides a robust and reliable way to prepare your favourite dishes.
- You can control your hob by numbers and not by eye with our precise and responsive Flame Select® heat control feature, available across selected gas hobs.

Guide To Electric Hobs

Venting Hobs

AVAILABLE IN 80CM, 70CM AND 60CM SIZES.

Featured model:
V58PHQ4C0 N70 80cm Venting Hob with new Twist Touch® Control

Flex Induction Hobs

AVAILABLE IN 90CM, 80CM AND 60CM SIZES.

Featured model:
T69FUV4L0 N90 90cm Flex induction hob with new Anthracite Grey Twist Pad®

Induction Hobs

AVAILABLE IN 80CM AND 60CM SIZES.

Featured model:
T56FHS1L0 N70 60cm Induction Hob new Twist Touch® Control

Ceramic Hobs

AVAILABLE IN 80CM AND 60CM SIZES.

Featured model:
T16NBE1L N50 60cm Ceramic Hob

Ceramic & Induction Hobs Finishes

Frameless with front bevel

Flushline

Frameless

General Features

COMBI INDUCTION
2 individual induction cooking zones can be combined to 1 large zone with even heat distribution.

COMBI ZONE
The Combi Zone allows you to combine two adjacent cooking zones into a single, larger zone. This flexibility enables the use of larger cookware or multiple pots and pans simultaneously, accommodating various cooking needs.

EXTENDED FRYING SENSOR
The sensor automatically adjusts the heat to the pan to maintain an even temperature. This control allows you to cook all dishes to perfection as it maintains a consistent heat preventing overcooking or burning.

TOUCH CONTROL
Simply select a zone then swipe your finger across the control panel to select a heat mode.

POWER BOOST
More heat when you need it. Power Boost is our smart, time-saving cooking hack. Want to boil your pasta water in a flash? Simply activate Power Boost to heat it much faster. Get a flexible boost for your dishes.

POWER TRANSFER
Move your pots, not your focus. Power Transfer recognizes the heat level and size of your pot, automatically transferring these settings to the new location when you move it. No more pushing and adjusting, a gentle tap is enough to confirm, keeping your focus on the essence of cooking – your intuition.

TWIST TOUCH®
Direct interaction with a twist of your finger. Twist Touch® control lets you select everything with the tip of your finger. Choose your desired cooking zone or select your preferred power level – cooking the easy way.

POWER MOVE
With Power Move, you have the flexibility to move pots and pans between two or three heating zones to accommodate various cooking needs.

ANTHRACITE GREY TWIST PAD®
The Anthracite Grey Twist Pad® allows you to precisely adjust the heating degree of pots, frying pans and grills with just one finger touch. Simply touch the Anthracite Grey Twist Pad® lightly to activate the desired cooking zone, then rotate to select the desired power level. The magnetic Anthracite Grey Twist Pad® is removable and ready to transform your hob into a creative and easy-to-clean hotspot!

FLEX INDUCTION
Flex Induction allows for flexibility with cooking by having larger cooking zones which automatically detect the size of the pans. this means you can use larger cookware like griddle plates or large caserole dishes with even heat distribution.

Home Connect Features

HOME CONNECT
Control your hob directly from a Smart Device App or Voice Command.

HOB-BASED HOOD CONTROL
Our hob-based Hood Control is a convenient feature that creates real cooking comfort. When you start your hob, your hood will turn on automatically. To do so, simply connect your hob to your registered Home Connect account.

FAVOURITE BUTTON
Personalise your hob according to your preferences: using Home Connect you can add your favourite functions to your hob and operate them directly via the Favourite Button in the user interface. This allows you to switch the hood lights on or off with ease from your hob or combine different settings to easily cook your everyday dishes at a glance.

Safety Features

RESIDUAL HEAT INDICATOR
The moment you turn off your hob, the display offers a clever safety function, indicating which cooking zones are still hot or warm.

CONTROL PANEL LOCK
Prevents unintended activation of the hob.

SAFETY TIME SWITCH OFF
For safety reasons, heating stops after a preset time if not used. It is possible to customise this feature.

Venting Hobs

- Installed with energy efficient brushless motors that offer powerful but quiet performance.
- Can be installed in Recirculation or Ducted Out – 4 Ventilation solutions available.
- A larger Overflow container will hold up to 700ml and is integrated in the base of the appliance so will not impact on storage space below.
- To install in re-circulation mode no further components are required.

	80CM		80CM		70CM		60CM	
	V68AUX4C0 | N90	**V58PHQ4C0 | N70**	**V58NHQ4L0 | N70**	**V58NBS1L0 | N50**	**V57THQ4L0 | N70**	**V56NBS1L0 | N50**		
	• Anthracite Grey Twist Pad® • 2 x Flex Zones • Climate Control • Extended Frying Sensor Pro • Anthracite Grey Side Trims	• Twist Touch® Control • 2 x Combi Zones • Extended Frying Sensor Pro • Flushline Installation	• Twist Touch® Control • 2 x Combi Zones • Extended Frying Sensor Pro	• Touch Control • 4 Zones / 1 Combi zone	• Twist Touch® Control • 2 x Combi Zones • Extended Frying Sensor Pro • Stainless Steel Side Trims	• Touch Control • 4 Zones / 1 Combi zone		
KEY FEATURES								
Home Connect	●	●	●		●			
Integrated extractor	●	●	●	●	●	●		
Automatic extraction	Fully sensor based	Auto-On	Auto-On	Auto-On	Auto-On	Auto-On		
Favourite Button	●	●	●	●	●	●		
Extended Frying Sensor	11 settings	11 settings	11 settings		11 settings			
Power Move / Power Boost / Power Transfer	/ ● / ●	/ ● /	/ ● /	/ ● /	/ ● /	/ ● /		
Flex Induction	●							
Number of Flex Induction zones	2							
Combi Zone Induction		2: Left & Right	2: Left & Right		2: Left & Right			
HOB FEATURES								
Number of individual zones	4	4	4	4	4	4		
Power Levels	17	17	17	17	17	17		
Digital display / Adaptable Volume	● / ●	● / ●	● / ●	● /	● / ●	● /		
Count up Timer / Count down timer	/ ●	/ ●	/ ●	/ ●	/ ●	/ ●		
Main on/off switch / Quick Start / Restart Function / Quick Stop	● / ● / ● /	● / ● / ● /	● / ● / ● /	● / ● / ● / ●	● / ● / ● /	● / ● / ● / ●		
Energy Consumption Display		●	●		●			
Pan Recognition /Pan Boost	● /	● /	● /	● /	● / ●	● /		
Demo Mode								
Dish Categories / Setting Recommendations	Via HC	Via HC	Via HC		Via HC			
Keep Warm Function	Via HC / Favourite Button	Via HC / Favourite Button	Via HC / Favourite Button		Via HC / Favourite Button			
SAFETY FEATURES								
Residual Heat Indicator / Wipe Protection Function	● /	● /	● /	● / ●	● /	● / ●		
Timer with automatic switch off for each zone				●		●		
Control Panel Lock / Safety Time Switch off	● / ●	● / ●	● / ●	● / ●	● / ●	● / ●		
HOOD FEATURES								
Climate Control sensor	●							
Power levels	17 + 2 Intensive	9 + 2 Intensive	9 + 2 Intensive	3 + 1 Intensive	9 + 2 Intensive	3 + 1 Intensive		
Automatic intensive revert setting	6 minutes	6 minutes	6 minutes	6 minutes	6 minutes	6 minutes		
Automatic or manual control / Interval operation	● / ●	● / ●	● / ●	● / ●	● / ●	● / ●		
Automatic after running (extraction/recirculation)	12 / 30 minutes	30 minutes	30 minutes	12 / 30 minutes	30 minutes	12 / 30 minutes		
Dishwasher safe grease filter cassette with spillage collection	Yes - 200ml capacity	Yes - 200ml capacity	Yes - 200ml capacity	Yes - 200ml capacity	Yes - 200ml capacity	Yes - 200ml capacity		
Dishwasher safe spillage overflow collector	700ml capacity	700ml capacity	700ml capacity	700ml capacity	700ml capacity	700ml capacity		
Metal grease filter / Electronic grease filter / cleanAir filter saturation indicators	● / ● / ●	● / ● / ●	● / ● / ●	● / ● / ●	● / ● / ●	● / ● / ●		
PERFORMANCE / TECHNICAL INFORMATION – HOB								
Nominal voltage / Maximum power output V / W	220-240 / 7,400	220-240 / 7,400	220-240 / 7,400	220-240 / 7,400	220-240 / 7,400	220-240 / 7,400		
Electrical cable length cm	110	110	110	110	110	110		
Rear left Induction zone kW/mm	2.20 / 200x240	2.50 / 190x210	2.50 / 190x210	2.20 / 190x210	2.50 / 190x210	2.20 / 190x210		
Rear right Induction zone kW/mm	2.20 / 200x240	2.50 / 190x210	2.50 / 190x210	1.80 / 180	2.50 / 190x210	1.40 / 145		
Front left Induction zone kW/mm	2.20 / 200x240	2.50 / 190x210	2.50 / 190x210	2.20 / 190x210	2.50 / 190x210	2.20 / 190x210		
Front right Induction zone kW/mm	2.20 / 200x240	2.50 / 190x210	2.50 / 190x210	2.20 / 210	2.50 / 190x210	2.20 / 210		
Flex Induction zone left kW/mm	3.30 / 400x240							
Flex Induction zone right kW/mm	3.30 / 400x240							
CombiZone left kW/mm		3.60 / 380x210	3.60 / 380x210	3.60 / 380x210	3.60 / 380x210	3.60 / 380x210		
CombiZone right kW/mm		3.60 / 380x210	3.60 / 380x210		3.60 / 380x210			
Rear left / right zone – with Power Boost max. kW	3.70 / 3.70	3.70 / 3.70	3.70 / 3.70	3.70 / 3.10	3.70 / 3.70	3.70 / 2.20		
Front left / right zone – with Power Boost max. kW	3.70 / 3.70	3.70 / 3.70	3.70 / 3.70	3.70 / 3.70	3.70 / 3.70	3.70 / 3.70		
PERFORMANCE / TECHNICAL INFORMATION – EXTRACTOR								
Extractor energy efficiency rating	B	B	B	B	B	B		
Extraction Rate in m³/h[1,2]								
Ducted / Recirculating power level Minimum	154 / 132	154 / 117	154 / 117	330 / 252	154 / 117	330 / 252		
Ducted / Recirculating power level Maximum	500 / 499	500 / 487	500 / 487	500 / 441	500 / 487	500 / 441		
Ducted / Recirculating power level Intensive	622 / 595	622 / 595	622/ 595	622 /595	622/ 595	622 /595		
Noise level (sound power) based on dB(A) re 1 pW[1,3]								
Ducted / Recirculating power level Minimum	42 / 41	42 / 41	42 / 41	61 / 55	42 / 41	61 / 55		
Ducted / Recirculating power level Maximum	69 / 68	69 / 68	69 / 68	69 / 66	69 / 68	69 / 66		
Ducted / Recirculating power level Intensive	74 / 72	74 / 72	74 / 72	74 / 72	74 / 72	74 / 72		
Motor power	170	170	170	170	170	170		

[1] Air flow and noise declarations made in line with CECED Code Of Conduct. [2]Measured according to EN61591 on largest pipe diameter. [3]Sound power measured according to EN60704-3 on largest pipe diameter.

Venting Hob Installation Options

For the full range of installation accessories see page 64 of the Appliance Line Drawings.

UNDUCTED RECIRCULATION

Why use Unducted Recirculation

- Easy and quick to fit
- Less parts
- Cost effective

Requires no reduction in depth to the bottom two drawers and allows for more design flexibility, for example, floating islands.

Automatic run on of the extractor fan at min power level dries the filters and continues air flow through the service void, removing any potential moisture for extra safety.

Full Depth Drawers Possible

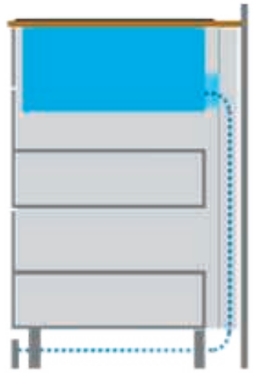

Installation considerations

What do I need?

- 4 x cleanAir filters and telescopic slider.
- These are supplied as standard with all inductionAir Plus appliances.

Good to know

- Telescopic slider ventilates air from the appliance into the service void. Max expansion of slider 80mm.
- Min requirement of service void 25mm, recommended 50mm min.

Important to note

- This option is NOT suitable for installations with non insulated walls.
- This is the ONLY installation type that uses the telescopic slider.

PARTLY DUCTED RECIRCULATION

Why use Partly Ducted Recirculation

Required when the distance from the back of the appliance to back of the base unit void is greater than 80mm.

Suitable for installations with non insulated walls or where damp has been an issue.

Maximum drawer depth 513mm with 70+cm worktop

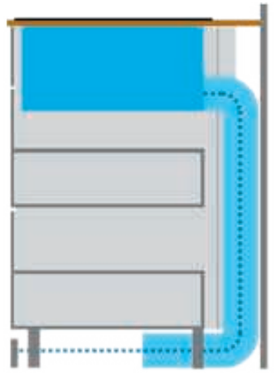

Installation considerations

What do I need?

- 4 x cleanAir re-circulating filters. Supplied with appliance.
- Starter Kit 1 **Z861KR0** or 2 **Z861KR1** depending on the work surface depth.

Good to know

- Partly Ducted Recirculation takes the air down into the plinth and ventilates in through the plinth cavity.
- This requires greater depth work surface or reduced depth drawers.
- The 94mm ducting height cannot be changed to a slimmer version (reduces effectiveness) using an adaptor, as the 94mm space is still needed for the 90 degree turn from the horizontal to the vertical.

Important to note

- Starter Kits 1 and 2 provide all the required ducting and connectors for this mode of installation.
- The appliance may be fitted with another manufacturers ducting that has a rounded radius (please check compatibility before purchase). You will still need to purchase a (**Z821PD1**) diffusor.

FULLY DUCTED RECIRCULATION

Why use Fully Ducted Recirculation

Required when the distance from the back of the appliance to back of the base unit void is greater than 80mm.

Gives total peace of mind for non insulated walls or where damp has been an issue.

Maximum Drawer Depth 513mm with 70+cm worktop

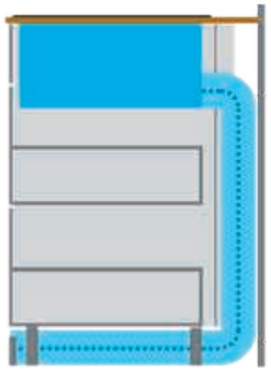

Installation considerations

What do I need?

- 4 x cleanAir re-circulating filters. Supplied with appliance.
- Starter Kit 1 **Z861KR0** or 2 **Z861KR1** depending on the work surface depth
- To fully duct to the plinth an additional straight channel and a connector are required. A 500mm ducting section should be sufficient in most cases depending on worktop depth.

Good to know

- Full Recirculation kit takes air down through the plinth and out into the room via a plinth vent.
- This requires greater depth or reduced depth drawers.
- The 94mm ducting height cannot be changed to a slimmer version (reduces effectiveness) using an adaptor, as the 94mm space is still needed for the 90 degree turn from the horizontal to the vertical.

Important to note

- The appliance maybe fitted with another manufacturers ducting that has a rounded radius (please check compatibility before purchase). You will still need to purchase a (**Z821PD1**) diffusor.

DUCTED OUT EXTRACTION

Why use Ducted Out

Allows the removal of heat and moisture created by cooking, as well as grease and odour.

An improvement of extraction rate over recirculation modes* 615m³h recirculation 622m³h ducted out

*As per test parameters for the energy label declaration.

Maximum Drawer Depth 513mm with 70+ worktop

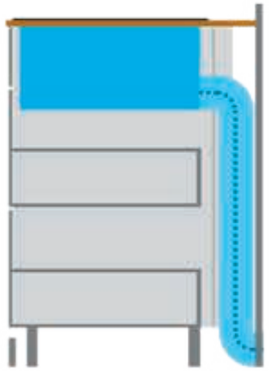

Installation considerations

What do I need?

- Starter Kit 3 **Z861KE1** (Includes 4 acoustic filters, radius bend, connector and 50cm straight channel).
- To complete your installation we can provide additional ducting lengths, connectors and adaptors.

Good to know

- It is also possible to use a fully ducted system, out of the kitchen.
- The acoustic filter kit is still required and is accessed the same way as the recirculation options.
- The Venting hob has been tested with a ducting run of 8 metres with 3 x 90 degree turns and maintaining efficient performance.
- We don't currently offer an external grid to go on the outside wall – this needs to be sourced independently.

Important to note

- The appliance maybe fitted with another manufacturers ducting that has a rounded radius (please check compatibility before purchase) You will still need to purchase (**Z811DU0**) x4 acoustic filters.

All models comply with COMMISSION REGULATION (EC) No 1275/2008 with regard to ecodesign requirements for standby and off mode electric power consumption.
14.6kW power output (20A); Current management options for 16A, 13A or 10A connection. *MasterPartner® and AAR product only.

Venting Hobs

80CM
V68AUX4C0

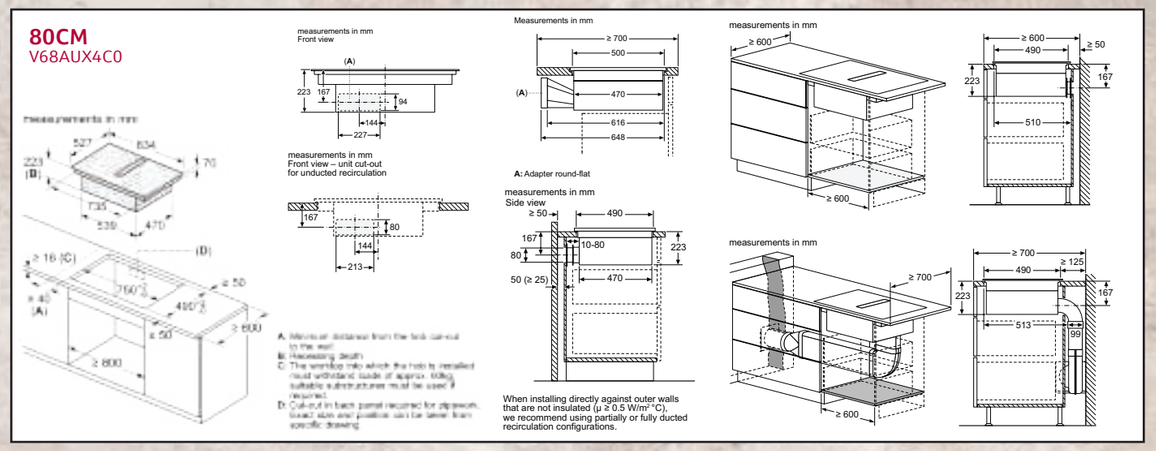

60CM
V56NBS1L0

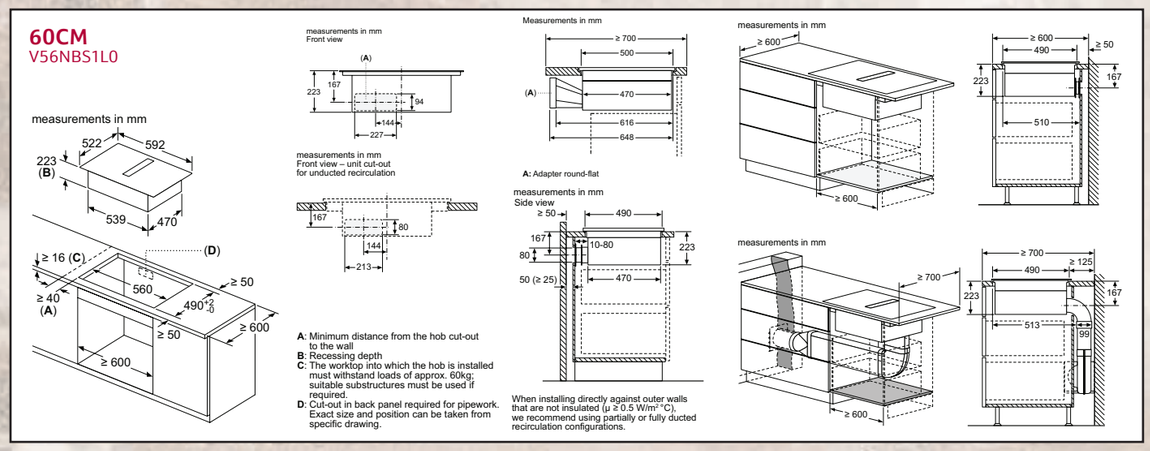

80CM
V58PHQ4C0, V58NHQ4L0, V58NBS1L0

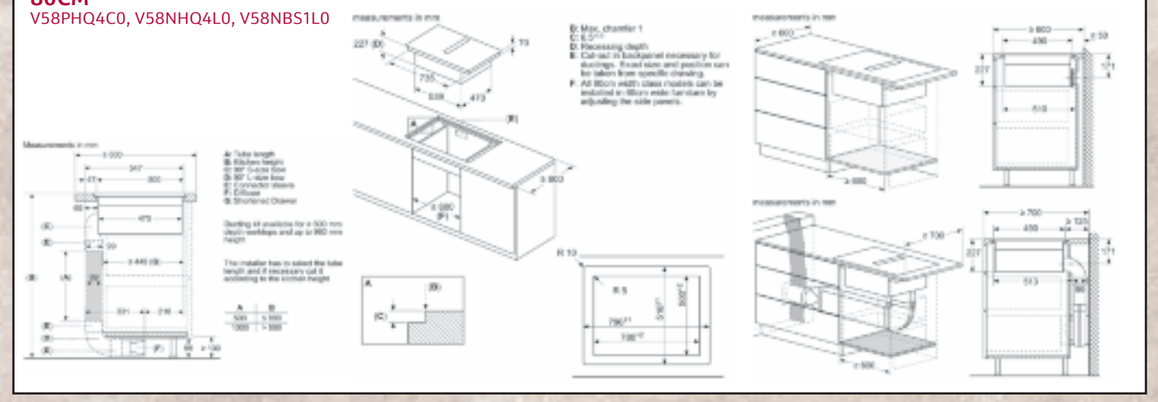

70CM
V57THQ4L0

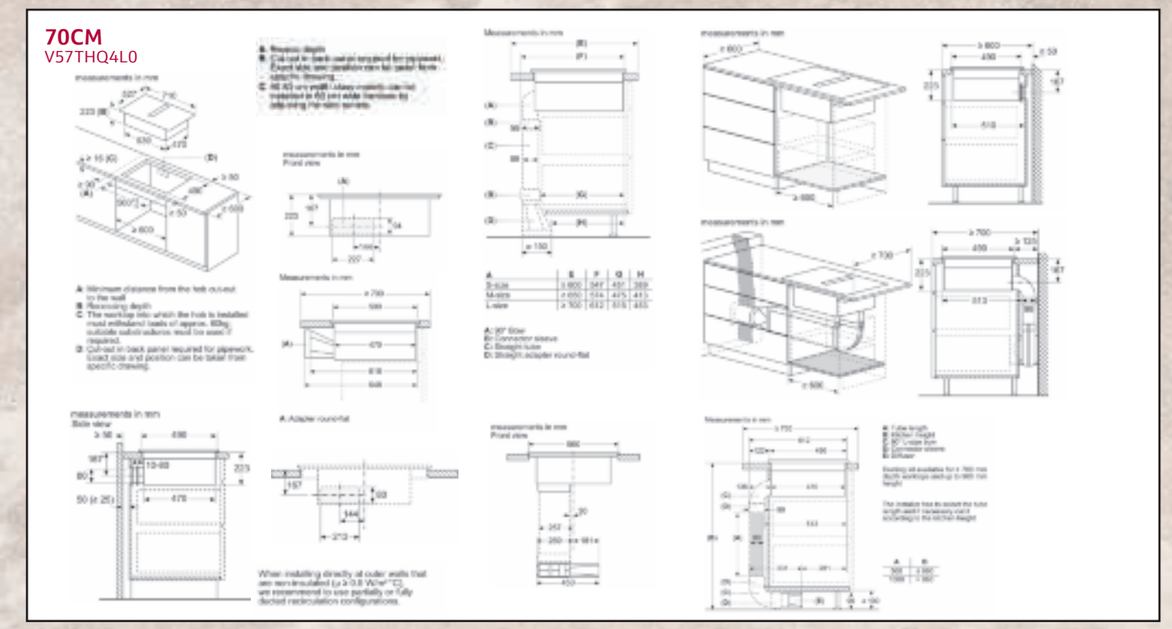

Venting Hobs Installation Options and Accessories

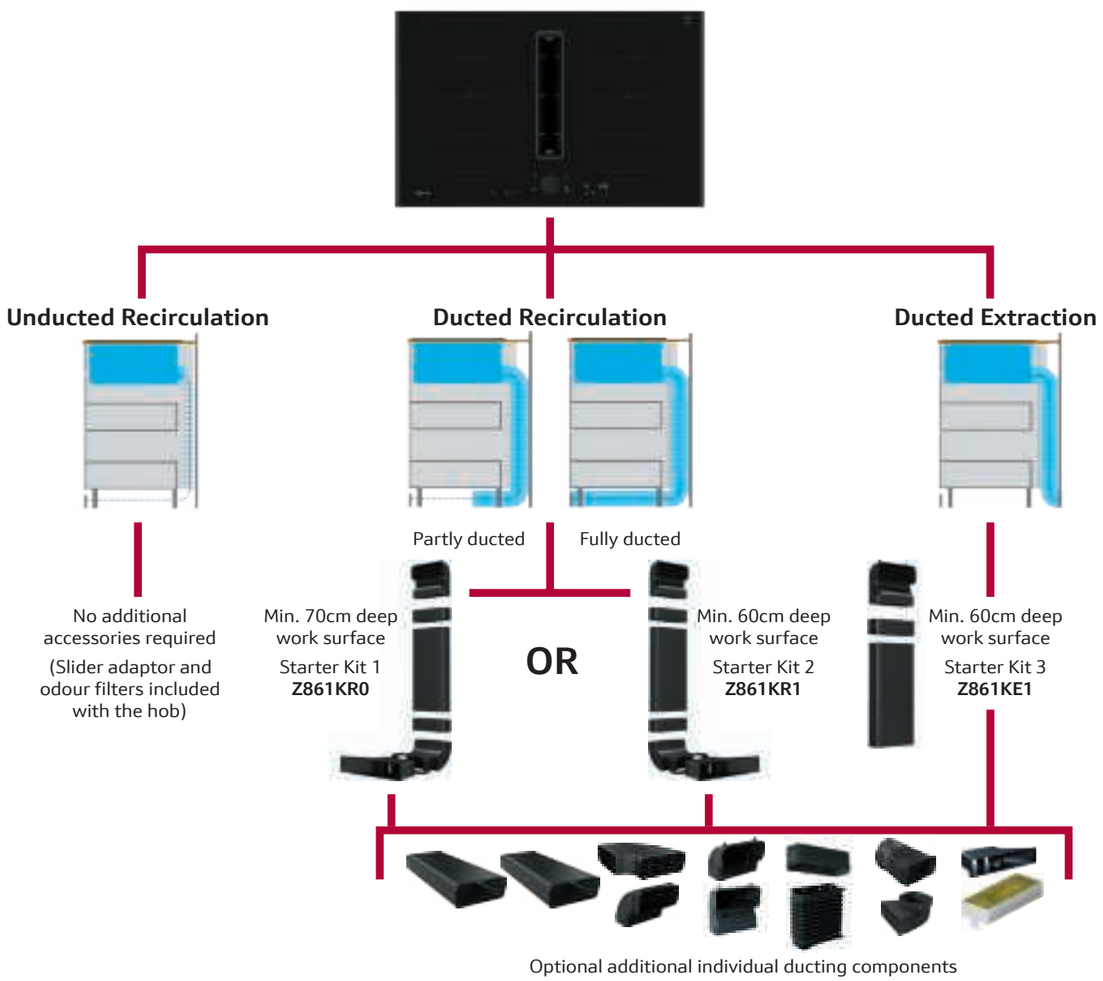

Venting Hobs Ducting Components

DESCRIPTION	CODE	MEASUREMENTS (mm)	COMPONENT
Flat channel ducting component, straight length, 100cm long Ducting component outlet size: 222mm x 89mm	Z861SM2		
Flat channel ducting component, straight length, 50cm long Ducting component outlet size: 222mm x 89mm	Z861SM1		
Flat channel 90° horizontal bend Ducting component outlet size: 222mm x 89mm	Z861SB1		
Flat channel 90° vertical bend (large Radius), suitable for 70cm worktop depths Ducting component outlet size: 222mm x 89mm	Z861SB2		
Flat channel 90° vertical bend (medium Radius), suitable for 65cm worktop depths Ducting component outlet size: 222mm x 89mm	Z861SB3		
Flat channel 90° vertical bend (short Radius), suitable for 60cm worktop depths Ducting component outlet size: 222mm x 89mm	Z861SB4		
Connection piece for use between ducting components and bends Ducting component size: 223mm x 90mm	Z861SS1		
Flexible Connection piece for use between ducting components and bends Ducting component size: 223mm x 90mm	Z861SS2		
Straight Adaptor / Converter flat to round (Ø 150mm) Ducting component outlet size: 222mm x 89mm	Z861SI0		
90° Adaptor / Converter flat to round (Ø 150mm) Ducting component outlet size: 222 mm x 89mm	Z861SI1		
Diffusor for ducted recirculation - outlet size: 222mm x 89mm	Z821PD1		
1 x set of CleanAir recirculation filters, Z811DU0 1 X set of Acoustic filters	Z821VR1		

Flex Induction Hobs

	90CM		80CM		60CM	
	T69FUV4L0 | N90	**T69FHV4L0 | N70**	**T68FUV4L0 | N90**	**T68FHV4L0 | N70**	**T66FHX4L0 | N70**	**T66FHE4L0 | N70**
	• Anthracite Grey Twist Pad® • 2 x Flex Zones + 32cm Triple Zone • Hob Hood Control • Smart Hood Automatic • Bevel Front	• Twist Touch® Control • 2 x Flex Zones + 32cm Triple Zone • Extended Extended Frying Sensor • Hob Hood Control • Smart Hood Automatic • Bevel Front	• Anthracite Grey Twist Pad® • 1 x Flex Zones + 3 Zones • Hob Hood Control • Smart Hood Automatic • Bevel Front	• Twist Touch® Control • 1 x Flex Zone + 3 Zones • Extended Extended Frying Sensor • Smart Hood Automatic • Bevel Front	• Twist Touch® Control • 2 x Flex Zones • Extended Extended Frying Sensor • Smart Hood Automatic • Bevel Front	• Twist Touch® Control • 1 x Flex Zone + 2 Zones • Extended Extended Frying Sensor • Smart Hood Automatic • Bevel Front
KEY FEATURES						
Home Connect	●	●	●	●	●	●
Hob-Hood Control	●	●	●	●	●	●
5" Full Touch colour display with Dish Categories	Via HC	Via HC	Via HC	Via HC	Via HC	Via HC
Favourite Button	●	●	●	●	●	●
Smart Hood Automatic	●	●	●	●	●	●
Extended Frying Sensor	11 settings	11 settings	11 settings	11 settings	11 settings	11 settings
Power Move / Power Boost / Power Transfer	/ ● / ●	/ ● / ●	/ ● / ●	/ ● / ●	/ ● / ●	/ ● / ●
Pan Boost						
Number of Flex Induction zones	2	2	1	1	2	1
Extended Flex Induction Zone						
Number of Combi Induction zones						
FEATURES						
Number of individual zones	5	5	5	5	4	4
Power levels	17	17	17	17	17	17
Digital display / Adaptable Volume	Red / White Display / ●	● / ●	Red / White Display / ●	● / ●	● / ●	● / ●
Count up Timer						
QuickStart	●	●	●	●	●	●
Restart Function	●	●	●	●	●	●
Energy Consumption Display	●		●			
Main on/off switch	●	●	●	●	●	●
Quick-Off Function / Pause Function	/ ●	/ ●	/ ●	/ ●	/ ●	/ ●
Pan Recognition	●	●	●	●	●	●
Demo Mode	●	●	●	●	●	●
Keep Warm Function	Via HC / Favourite Button	Via HC / Favourite Button	Via HC / Favourite Button	Via HC / Favourite Button	Via HC / Favourite Button	Via HC / Favourite Button
SAFETY FEATURES						
Residual Heat Indicator	●	●	●	●	●	●
Timer with automatic switch off for each zone	●	●	●	●	●	●
Control Panel Lock	●	●	●	●	●	●
Safety Time Switch off	●	●	●	●	●	●
Wipe Protection Function						
PERFORMANCE / TECHNICAL INFORMATION						
Nominal voltage V	220-240	220-240	220-240	220-240	220-240	220-240
Maximum power output W	11,100	11,100	7,400	7,400	7,400	7,400
Electrical cable length cm	110	110	110	110	110	110
Plug&Play with GB plug						
Rear left Flex Induction zone - power kW/mm	2.20 | 200x230	2.20 | 200x230			2.20 | 190x230	2.20 | 190x230
Rear left zone power kW/mm			1.40 | 145	1.60 | 145		
Rear right Flex Induction zone - power kW/mm	2.20 | 200x230	2.20 | 200x230	2.20 | 200x210	2.20 | 200x210	2.20 | 190x230	
Rear right zone power kW/mm						1.60 | 145
Rear Centre zone power kW/ mm	2.20, 2.60, 3.30 | 210, 260, 320	2.20, 2.60, 3.30 | 210, 260, 320	2.20 | 240	2.20 | 240		
Front Centre zone power kW/ mm						
Front left Flex Induction zone - power kW/mm	2.20 | 200x230	2.20 | 200x230			2.20 | 190x230	2.20 | 190x230
Front left zone power kW/ mm			1.80 | 180	2.00 | 180		
Front right Flex Induction zone - power kW/mm	2.20 | 200x230	2.20 | 200x230	2.20 | 200x210	2.20 | 200x210	2.20 | 190x230	
Front right zone power kW/ mm						2.50 | 210
Flex Induction Zone left power kW/mm	3.30 | 400x230	3.30 | 400x230			3.30 | 380x230	3.30 | 380x230
Flex Induction Zone right power kW/mm	3.30 | 400x230	3.30 | 400x230	3.30 | 400x210	3.30 | 400x210	3.30 | 380x230	
Extended Flex Induction rear left - power kW/mm						
Extended Flex Induction rear right - power kW/mm						
Combi Zone left power kW/mm						
Combi Zone right power kW/mm						
Rear left zone with Power Boost (max. kW)	3.70	3.70	2.20	2.20	3.70	3.70
Rear right zone with Power Boost (max. kW)	3.70	3.70	3.70	3.70	3.70	2.20
Rear Centre zone with Power Boost (max. kW)	3.70	3.70	3.70	3.70		
Front Centre zone with Power Boost (max. kW)						
Front left zone with Power Boost (max. kW)	3.70	3.70	3.10	3.10	3.70	3.70
Front right zone with Power Boost (max. kW)	3.70	3.70	3.70	3.70	3.70	3.70

All models comply with COMMISSION REGULATION (EC) No 1275/2008 with regard to ecodesign requirements for standby and off mode electric power consumption.
14.6kW power output (20A); Current management options for 16A, 13A or 10A connection. *MasterPartner® and AAR product only.

Induction Hobs

		80CM				60CM							
		T58FHW1L0 | N70		T58PHW1L0 | N70		T56FHS1L0 | N70		T36FBE1L0 | N30		T36FBE1L0G | N30		T36CA50X1U | N30	
		• Twist Touch® Control • CombiZone - 5 zones • Hob Hood Control • Smart Hood automatic • Flushline		• Twist Touch® Control • CombiZone - 5 zones • Hob Hood Control • Smart Hood automatic • Bevel Front		• Twist Touch® Control • CombiZone - 4 zones • Smart Hood automatic • Bevel Front		• Touch Control • 4 zones • Bevel Front		• Touch Control • 4 zones • Plug & Play with GB plug • Bevel Front		• Touch Control • 4 zones / 1 boost zone • Plug & Play with GB plug • Frameless	
KEY FEATURES													
HomeConnect		●		●		●							
Hob-Hood Control		●		●		●							
5" Full Touch colour display													
Favourite Button		●		●		●							
Smart Hood Automatic		●		●		●							
Power Move / Power Boost / Power Transfer		/ ● /		/ ● /		/ ● /		/ ● /		/ ● /		/ Rear left only /	
Pan Boost													
Number of Combi Zones		1		1		1							
FEATURES													
Number of individual zones		5		5		4		4		4		4	
Power levels		17		17		17		17		17		9	
Digital display / Adaptable Volume		● / ●		● / ●		● / ●		● /		● /		● /	
QuickStart		●		●		●		●		●		●	
Restart Function		●		●		●		●		●			
Main on/off switch		●		●		●		●		●		●	
Quick-Off Function / Pause Function		/ ●		/ ●		/ ●		● / ●		● / ●		● / ●	
Pan Recognition		●		●		●		●		●		●	
Demo Mode		●		●		●							
Keep Warm Function		Via HC / Favourite Button		Via HC / Favourite Button		Via HC / Favourite Button							
SAFETY FEATURES													
Residual Heat Indicator		●		●		●		●		●		●	
Timer with automatic switch off for each zone		●		●		●		●		●			
Control Panel Lock		●		●		●		●		●		●	
Safety Time Switch off		●		●		●		●		●		●	
Wipe Protection Function													
PERFORMANCE / TECHNICAL INFORMATION													
Nominal voltage	V	220-240		220-240		220-240		220-240		220-240		220-240	
Maximum power output	W	7,400		7,400		6,900		4,600		3,700		3,700	
Electrical cable length	cm	110		110		110		110		110		110	
Plug&Play with GB plug										●		●	
Rear left Flex Induction zone - power	kW/mm												
Rear left zone - power	kW/mm	1.60	145	1.60	145	2.50	190x210	1.80	180	1.80	180	1.80	180
Rear right Flex Induction zone - power	kW/mm												
Rear right zone - power	kW/mm	2.50	190x210	2.50	190x210	1.60	145	1.40	145	1.40	145	1.40	145
Rear Centre zone - power	kW/mm	2.50	240	2.50	240								
Front Centre zone - power	kW/mm												
Front left Flex Induction zone - power	kW/mm												
Front left zone - power	kW/mm	2.00	180	2.00	180	2.50	190x210	1.80	180	1.80	180	1.40	145
Front right Flex Induction zone - power	kW/mm												
Front right zone - power	kW/mm	2.50	190x210	2.50	190x210	2.00	180	2.20	210	2.20	210	1.80	180
Flex Induction Zone left - power	kW/mm												
Flex Induction Zone right - power	kW/mm												
Extended Flex Induction rear left - power	kW/mm												
Extended Flex Induction rear right - power	kW/mm												
Combi Zone left - power	kW/mm					3.60	380x210						
Combi Zone right - power	kW/mm	3.30	380x210	3.30	380x210								
Rear left zone - with Power Boost	max. kW	2.20		2.20		3.70		3.10		3.00		3.10	
Rear right zone - with Power Boost	max. kW	3.70		3.70		2.20		2.20		2.20			
Rear Centre zone - with Power Boost	max. kW	3.70		3.70									
Front Centre zone - with Power Boost	max. kW												
Front left zone - with Power Boost	max. kW	3.10		3.10		3.70		3.10		3.00			
Front right zone - with Power Boost	max. kW	3.70		3.70		3.10		3.70		3.00			

All models comply with COMMISSION REGULATION (EC) No 1275/2008 with regard to ecodesign requirements for standby and off mode electric power consumption.
14.6kW power output (20A); Current management options for 16A, 13A or 10A connection. *MasterPartner® and AAR product only.

Ceramic Hobs

	80CM		60CM			
	T18FDH9L | N70		**T16NBE1L | N50**		**T16NKE0L | N30**	
	• Touch Control • 4 zones • Dual & Extendible Zones • Boost Function • Bevel Front		• Touch Control • 4 zones • Frameless		• Side Control dials • 4 zones • Frameless	
FEATURES						
Number of individual zones	4		4		4	
No. of dual zones	2					
No. of extendable zones	1					
Power Boost	Centre; Front Left					
Power levels	17		17		9	
Digital display	●		●			
Restart function	●		●			
Energy consumption display	●					
Main on/off switch	●		●			
Keep warm function	●					
SAFETY FEATURES						
Residual heat indicator	●		●		●	
Timer with automatic switch off for each zone	●		●			
Control panel lock	●		●			
Safety time switch off	●		●			
Wipe protection function	●					
PERFORMANCE/TECHNICAL INFORMATION						
Nominal voltage V	220-240		220-240		220-240	
Maximum power output W	9,300		6,600		6,600	
Electrical cable length cm	110		110		110	
Plug&Play with GB plug						
Rear left zone kW/mm	1.20	145	2.00	180	2.20	210
Rear right zone kW/mm			1.20	145	1.20	145
Rear centre zone kW/mm	1.70-2.40	180-230				
Front centre zone kW/mm						
Front left zone kW/mm	0.80-2.10	120-210	1.20	145	1.20	145
Front right zone kW/mm	1.80-2.60	170-265	2.20	210	2.00	180
Rear left zone – with Power Boost max. kW						
Rear right zone – with Power Boost max. kW						
Rear centre zone – with Power Boost max. kW	3.40					
Front centre zone – with Power Boost max. kW						
Front left zone – with Power Boost max. kW						
Front right zone – with Power Boost max. kW	2.60					

All models comply with COMMISSION REGULATION (EC) No 1275/2008 with regard to ecodesign requirements for standby and off mode electric power consumption.
14.6kW power output (20A); Current management options for 16A, 13A or 10A connection. *MasterPartner® and AAR product only.

Induction Cookware Accessories Range

Excellent accessories that perform as well as your hob does.

This range of Induction Cookware Accessories are designed to perfectly fit Flex Induction and Induction hobs. The rectangular shapes **perfectly fit into the flex zones**.

All accessories are **oven-proof up to 220°C** with a **non-stick coating** that cooks your food perfectly while also being **easy to clean**.

The pans are designed to be **easily stacked** to maximise your storage space.

Double Flex Pans Set (4 Pans)

Includes:
- Flex Pan Large
- Flex Pan Medium
- 2x Flex Pan small with lid.

Z9404FF0

Single Flex Pans Set (3 Pans)

Includes:
- Flex Pan Medium
- 2x Flex Pan small with lid.

Z9403FF0

Large Pan

Very large frying surface for cooking big portions like for meat fish and more.

Z9401FF0

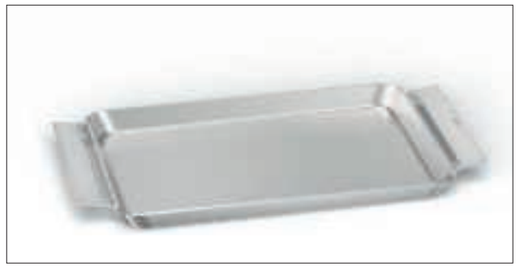

Teppan Yaki

- Oven proof up to 220C.
- Excellent non-stick properties
- Even heat distribution
- Easy to clean

Z9401TY0

Flex Induction Hobs

90CM
T50FS41X0

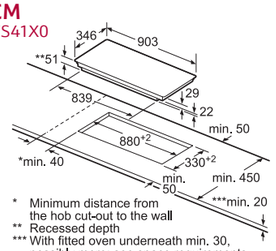

* Minimum distance from the hob cut-out to the wall
** Recessed depth
*** With fitted oven underneath min. 30, possibly more; see space requirements for the oven

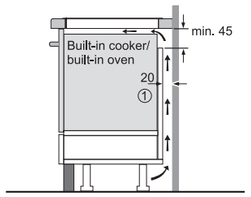

① Ventilation gap must be present

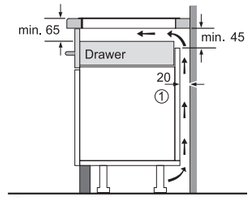

① Ventilation gap must be present.

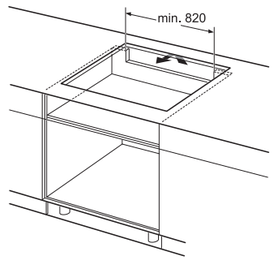

90CM
T59FT50X0

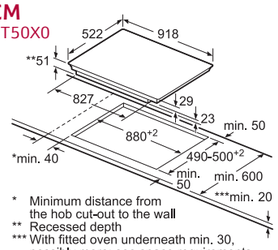

* Minimum distance from the hob cut-out to the wall
** Recessed depth
*** With fitted oven underneath min. 30, possibly more; see space requirements for the oven

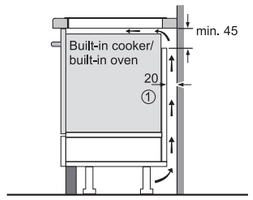

① Ventilation gap must be present

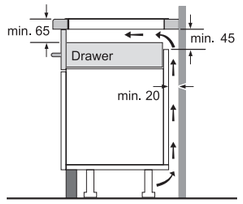

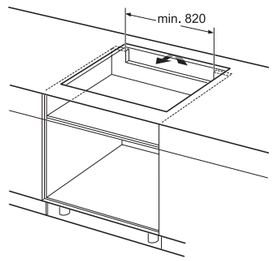

80CM
T58FT20X0,
T58FD20X0

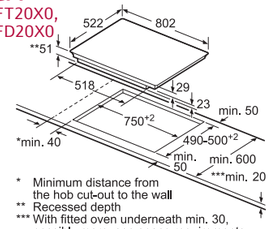

* Minimum distance from the hob cut-out to the wall
** Recessed depth
*** With fitted oven underneath min. 30, possibly more; see space requirements for the oven

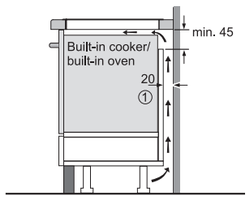

① Ventilation gap must be present

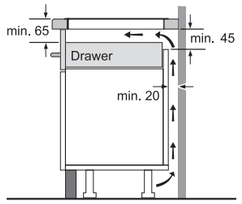

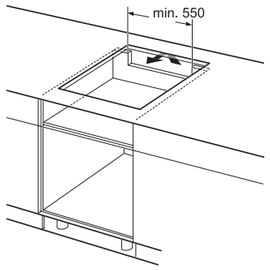

60CM
T56FT60X0,
T56FD50X0

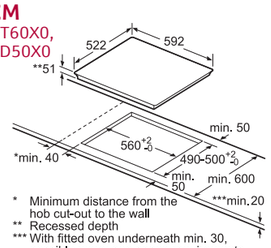

* Minimum distance from the hob cut-out to the wall
** Recessed depth
*** With fitted oven underneath min. 30, possibly more; see space requirements for the oven

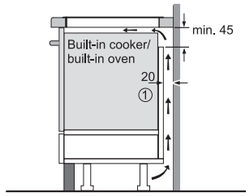

① Ventilation gap must be present

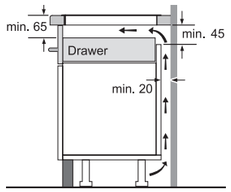

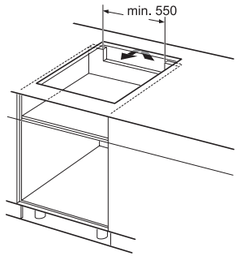

60CM
T36FBE1L0, T66FHX4L0

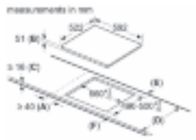

measurements in mm

A: Minimum distance from the hob cut-out to the wall.
B: Recessed depth
C: The clearance between the surface of the worktop and the top of the front of the oven must be 30 mm. See space requirements for the oven.

The worktop into which the hob is installed must withstand loads of approx. 80 kg; suitable substructures must be used if required.

D	E	F
555-600	50	≥ 35
> 600	≥ 50	≥ 50

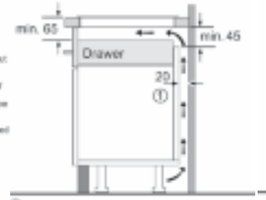

① Ventilation gap must be present.

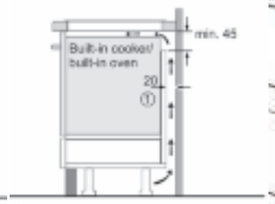

① Ventilation gap must be present

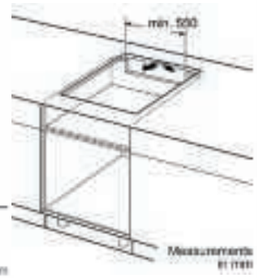

All measurements in mm

Measurements in mm

Induction & Ceramic Hobs

ALL INDUCTION HOBS USE ONE OF THESE LINE DRAWINGS

80CM & 60CM
T48FD23X2
T46FD53X2
T36FB40X0
T36FB41X0G

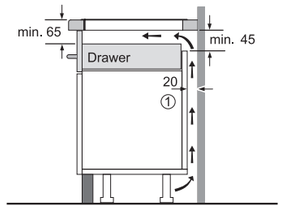

① Ventilation gap must be present.

80CM & 60CM
T48PD23X2
T46PD53X2

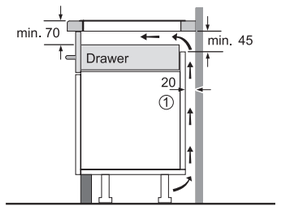

① Ventilation gap must be present.

ALL INDUCTION HOBS USE THESE LINE DRAWINGS

80CM & 60CM
T48PD23X2, T46PD53X2, T48FD23X2, T46FD53X2, T36FB40X0, T36FB41X0G

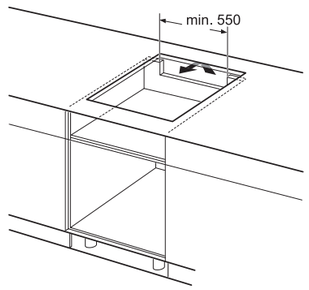

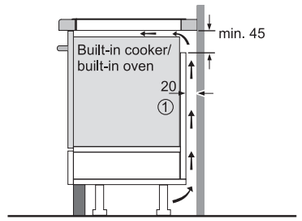

① Ventilation gap must be present

80CM
T48PD23X2

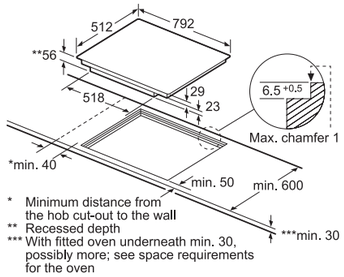

* Minimum distance from the hob cut-out to the wall
** Recessed depth
*** With fitted oven underneath min. 30, possibly more; see space requirements for the oven

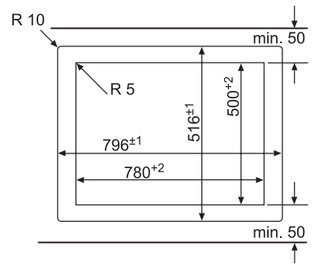

60CM
T36CA50X1U

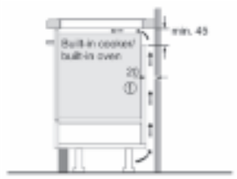

① Ventilation gap must be present

All measurements in mm

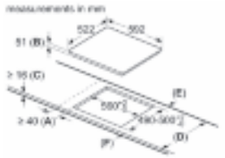

A: Minimum distance from the hob cut-out to the wall.
B: Recessed depth
C: The clearance between the surface of the worktop and the top of the front of the oven must be 30 mm. See space requirements for the oven.

The worktop into which the hob is installed must withstand loads of approx. 80 kg; suitable substructures must be used if required.

D	E	F
555-600	50	≥ 35
> 600	≥ 50	≥ 50

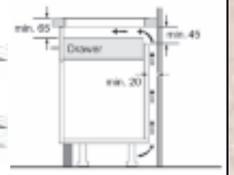

Measurements in mm

Flex Induction Accessories

Spanning the length of your Flex Induction zone, our accessories are designed to inspire you in the kitchen. From everyday cooking to theatrical displays, there's an accessory to bring out the best in your favourite dishes.

Product	Description	Material	Code	Part Number
Griddle Plate 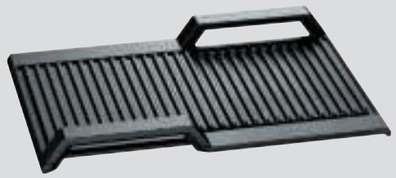	Surface Area 41.5 x 26.5cm Ideal for cooking steaks, fish, flatbreads and sliced vegetables, an induction griddle plate offers considerably more flexibility than a standard square griddle pan. All accessories within our induction range are easy to clean and dishwasher safe.	Cast Iron	Z9416X2	17000339
Oval Roaster	With our roaster and steam accessory, it's possible to steam on a NEFF induction hob too. Ideal for preparing delicate fish and vegetables, steam cooking is a great way to prepare healthy, nutritious dishes. Oven and dishwasher safe.	Stainless steel	Z9410X1	00573879
Steam Rack for use with Oval Roaster 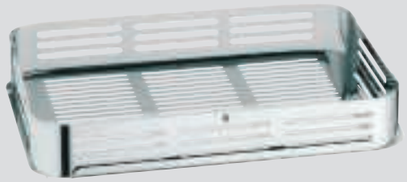		Stainless steel	Z9415X1	00576118

Saucepans

Ferrous metal saucepans are required for use on an induction hob. To check if a saucepan can be used with an induction hob use our quick magnetic test shown below. NEFF saucepans have been tried and tested to ensure that they offer optimum performance with NEFF hobs.

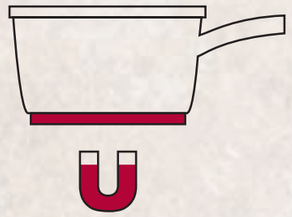

Magnetic base

Product	Description	Material	Code	Part Number
3 Piece Pan Set	2 x pots, 1 x Pan	Stainless steel	Z943SE0	17004098
4 Piece Pan Set	1 x Saute pan, 2 x Pots with lids, 1 x milk pan	Stainless steel	Z9404SE0	17005721
6 Piece Pan Set	2 x Saute pan, 3 x Pots with lids, 1 x milk pan	Stainless steel	Z9406SE0	17005724
18.5 cm Non Stick Frying Pan		Cast Iron	Z9428FE0	17005718

Guide To Gas Hobs

Gas Hobs

AVAILABLE IN 90CM, 75CM AND 60CM SIZES.

Featured model: T27CS59S0 N70 75cm Gas Hob

Gas Hobs Finishes

Ceramic glass on stainless steel trim

Stainless steel finish with panel insert

Black finish

Black tempered glass

Steel

Gas Features

FLAME SELECT®

Cook everything just right with 9-level Flame Select®. With Flame Select® the gas flame adapts to your cooking, offering precise control every time. For the first time ever, cooking with gas is as easy as cooking on an electric hob.

POWER LEVEL DISPLAY

Some gas hobs benefit from a host of features that are usually found on ceramic hobs, including an LED display. The residual heat indicator displays if there is any residual heat on the hob. In the event of a problem with the individual burner the indicator lights also act as warning lights.

HIGH SPEED BURNERS

Provide a surge of extra power; particularly useful for boiling a large pan of water quickly.

WOK BURNER

The secret of Chinese stir fry cooking is heat and speed. Our Domino wok (N23TS19N0) delivers 6.0kW.

FLAME CONTROL

The flame failure safety device shuts down the supply of gas to the hob if the flame goes out for any reason. The automatic reignition uses a heat sensor to detect if the flame goes out and, if so, will automatically attempt to reignite.

CAST IRON PAN SUPPORTS

Firmly hold the pan above the flame, leaving space between the base and the burner. They're used on the majority of our models because of their robust and sturdy nature and tolerance to prolonged contact with heat.

EASY GRIP CONTROLS

Ergonomically designed to be gripped and turned easily, even with wet or greasy hands.

SIMMER SETTING

Excellent for slow simmering, almost all of our gas hobs have a very low burner with a maximum of just 1.0kWh.

Gas Hobs

		90CM	
		T29TS79N0 | N90	**T29DS69N0 | N70**
		• Black/Stainless steel Top Trim • 5 burner • 6.0kW Wok Burner • Dishwasher Proof cast iron supports • Flag layout • Flame Select®	• Stainless Steel • 5 burner • 5.0kW Wok Burner • Cast iron supports • Star layout • Flame Select®
Control position		Front	Front
Hob surface type		Ceramic glass	Metal
KEY FEATURES			
Flame Select®		●	●
Digital power level display			
Black control panel insert		●	
Number of dual circuit wok style burners		1	1
High power (5.0kW+) wok burner		●	●
Dual control wok burner		●	●
FEATURES			
Number of cooking zones		5	5
Individual power levels		9	9
Variable power levels			
Ignition via control dials		●	●
Flame failure safety device		●	●
Cast iron pan supports (number)		3	3
Cast iron finish pan supports (number)			
Enamelled steel pan supports		●	
Combine with other Top Trim models using Connecting link		●	
PERFORMANCE / TECHNICAL INFORMATION			
Nominal voltage	V	220-240	220-240
Maximum gas power output load	W	13,700	12,500
Total connected electrical load	max. W	2.00	1.10
Cable length	cm	150	150
GB plug			
Left burner power	kW	6.00	
Front left burner power	kW		1.00
Back left burner power	kW		1.75
Centre/Centre front burner power	kW	1.10	5.00
Centre back burner power	kW	1.90	
Front right burner power	kW	1.90	1.75
Back right burner power	kW	2.80	3.00
Right burner power	kW		
Pre-set for natural gas		●	●
CE Marked		●	●
STANDARD ACCESSORY			
Wok stand		●	
LPG jets	mbar	28-30 / 37	28-30 / 37
OPTIONAL ACCESSORY			
Connecting link to combine with other		Z9914X0	

Gas Hobs

	75CM		75CM		
	T27CS59S0 | N70	**T27DS79N0 | N70**	**T27DS59S0 | N70**	**T27DS59N0 | N70**	**T27BB59N0 | N50**
	• Black Tempered Glass • 5 burner • 4.0kW Wok Burner • Cast iron supports • Star layout • Flame Select®	• Stainless Steel • 5 burner • 5.0kW Wok Burner • Cast iron supports • Flag layout • Flame Select®	• Black • 5 burner • 4.0kW Wok Burner • Cast iron supports • Star layout • Flame Select®	• Stainless Steel • 5 burner • 4.0kW Wok Burner • Cast iron supports • Star layout • Flame Select®	• Stainless Steel • 5 burner • 3.3kW Wok Burner • Cast iron supports
					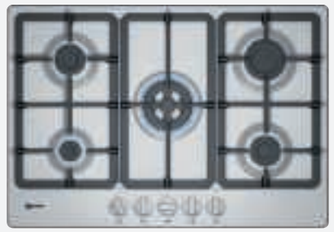
Control position	Front	Front	Front	Front	Front
Hob surface type	Tempered glass	Metal	Metal	Metal	Metal
KEY FEATURES					
Flame Select®	●	●	●	●	
Digital power level display					
Black control panel insert					
Number of dual circuit wok style burners	1	1	1	1	1
High power (5.0kW+) wok burner		●			
Dual control wok burner	●	●	●	●	●
FEATURES					
Number of cooking zones	5	5	5	5	5
Individual power levels	9	9	9	9	
Variable power levels					●
Ignition via control dials	●	●	●	●	●
Flame failure safety device	●	●	●	●	●
Cast iron pan supports (number)	5	3	3	3	3
Cast iron finish pan supports (number)					
Enamelled steel pan supports					
Combine with other Top Trim models using Connecting link					
PERFORMANCE / TECHNICAL INFORMATION					
Nominal voltage V	220-240	220-240	220-240	220-240	220-240
Maximum gas power output load W	11,500	12,500	11,500	11,500	10,800
Total connected electrical load max. W	1.10	1.10	1.10	1.10	1.10
Cable length cm	100	100	100	100	150
Plug&Play with GB plug					
Left burner power kW		5.00			
Front left burner power kW	1.00		1.00	1.00	1.00
Back left burner power kW	1.75		1.75	1.75	1.75
Centre/Centre front burner power kW	4.00	1.00	4.00	4.00	3.30
Centre back burner power kW		1.75			
Front right burner power kW	1.75	1.75	1.75	1.75	1.75
Back right burner power kW	3.00	3.00	3.00	3.00	3.00
Right burner power kW					
Pre-set for natural gas	●	●	●	●	●
CE Marked	●	●	●	●	●
STANDARD ACCESSORY					
Wok stand					
LPG jets mbar	28-30 / 37	28-30 / 37	28-30 / 37	28-30 / 37	28-30 / 37

All models comply with COMMISSION REGULATION (EC) No 1275/2008 with regard to ecodesign requirements for standby and off mode electric power consumption.
14.6kW power output (20A); Current management options for 16A, 13A or 10A connection. *MasterPartner® and AAR product only.

Gas Hobs

	60CM		60CM	
	T26CS49S0 | N70	**T26DS59N0 | N70**	**T26DS49N0 | N70**	**T26DS49S0 | N70**
	• Black Tempered Glass • 4 burner • Cast iron supports • Flame Select®	• Stainless Steel • 4 burner • 3.5kW Wok Burner • Cast iron supports • Flame Select®	• Stainless Steel • 4 burner • Cast iron supports • Flame Select®	• Black • 4 burner • Cast iron supports • Flame Select®
Control position	Front	Front	Front	Front
Hob surface type	Tempered glass	Metal	Metal	Metal
KEY FEATURES				
Flame Select®	●	●	●	●
Digital power level display				
Black control panel insert				
Number of dual circuit wok style burners		1		
High power (5.0kW+) wok burner				
Dual control wok burner				
FEATURES				
Number of cooking zones	4	4	4	4
Individual power levels	9	9	9	9
Variable power levels				
Ignition via control dials	●	●	●	●
Flame failure safety device	●	●	●	●
Cast iron pan supports (number)	4	2	2	2
Cast iron finish pan supports (number)				
Enamelled steel pan supports (number)				
Combine with other Top Trim models using Connecting link				
PERFORMANCE / TECHNICAL INFORMATION				
Nominal voltage V	220-240	220-240	220-240	220-240
Maximum gas power output load W	7,500	8,000	7,500	7,500
Total connected electrical load max. W	1.10	1.10	1.10	1.10
Cable length cm	100	100	100	100
Plug&Play with GB plug				
Left burner power kW				
Front left burner power kW	1.75	1.75	1.75	1.75
Back left burner power kW	1.75	1.75	1.75	1.75
Centre/Centre front burner power kW				
Centre back burner power kW				
Front right burner power kW	1.00	1.00	1.00	1.00
Back right burner power kW	3.00	3.50	3.00	3.00
Right burner power kW				
Pre-set for natural gas	●	●	●	●
CE Marked	●	●	●	●
STANDARD ACCESSORY				
Wok stand				
LPG jets mbar	28-30 / 37	28-30 / 37	28-30 / 37	28-30 / 37

All models comply with COMMISSION REGULATION (EC) No 1275/2008 with regard to ecodesign requirements for standby and off mode electric power consumption.
14.6kW power output (20A); Current management options for 16A, 13A or 10A connection. *MasterPartner® and AAR product only.

Gas Hobs

		60CM		60CM	
		T26BB59N0 | N50	**T26CB49S0 | N50**	**T26BR46N0 | N30**	**T26BR46S0 | N30**
		• Stainless Steel • 4 burner • 3.3kW Wok Burner • Cast iron supports	• Black Tempered Glass • 4 burner • Cast iron supports	• Stainless steel • 4 burner • Cast Iron Finish • Side controls	• Black • 4 burner • Cast Iron Finish • Side controls
Control position		Front	Front	Right Side	Right Side
Hob surface type		Metal	Tempered glass	Metal	Metal
KEY FEATURES					
Flame Select®					
Digital power level display					
Black control panel insert					
Number of dual circuit wok style burners		1			
High power (5.0kW+) wok burner					
Dual control wok burner		●			
FEATURES					
Number of cooking zones		4	4	4	4
Individual power levels					
Variable power levels		●	●	●	●
Ignition via control dials		●	●	●	●
Flame failure safety device		●	●	●	●
Cast iron pan supports (number)		2	2		
Cast iron finish pan supports (number)				2	2
Enamelled steel pan supports (number)					
Combine with other Top Trim models using Connecting link					
PERFORMANCE / TECHNICAL INFORMATION					
Nominal voltage	V	220-240	220-240	220-240	220-240
Maximum gas power output load	W	7,800	7,500	7,400	7,400
Total connected electrical load	max. W	1.10	1.10	0.8	0.8
Cable length	cm	100	100	100	100
Plug&Play with GB plug					
Left burner power	kW				
Front left burner power	kW	1.75	1.75	3.00	3.00
Back left burner power	kW	1.75	1.75	1.70	1.70
Centre/Centre front burner power	kW				
Centre back burner power	kW				
Front right burner power	kW	1.00	1.00	1.00	1.00
Back right burner power	kW	3.30	3.00	1.70	1.70
Right burner power	kW				
Pre-set for natural gas		●	●	●	●
CE Marked		●	●	●	●
STANDARD ACCESSORY					
Wok stand					
LPG jets	mbar	28-30 / 37	28-30 / 37	28-30/37mbar	28-30/37mbar

All models comply with COMMISSION REGULATION (EC) No 1275/2008 with regard to ecodesign requirements for standby and off mode electric power consumption.
14.6kW power output (20A); Current management options for 16A, 13A or 10A connection. *MasterPartner® and AAR product only.

Gas Hobs

90CM
T29TS79N0

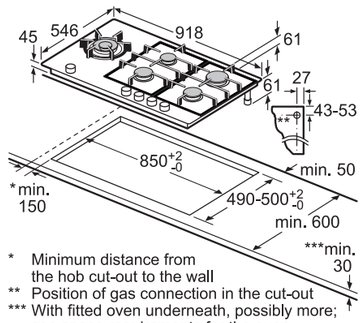

* Minimum distance from the hob cut-out to the wall
** Position of gas connection in the cut-out
*** With fitted oven underneath, possibly more; see space requirements for the oven

60CM
T26TA49N0

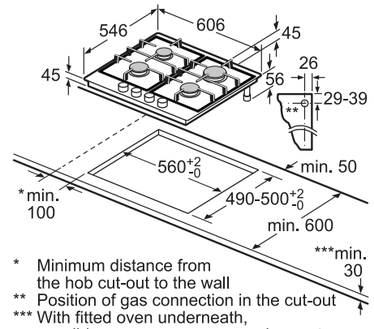

* Minimum distance from the hob cut-out to the wall
** Position of gas connection in the cut-out
*** With fitted oven underneath, possibly more; see space requirements for the oven

75CM
T27CS59S0

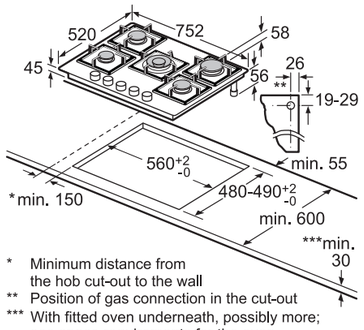

* Minimum distance from the hob cut-out to the wall
** Position of gas connection in the cut-out
*** With fitted oven underneath, possibly more; see space requirements for the oven

60CM
T26CS49S0

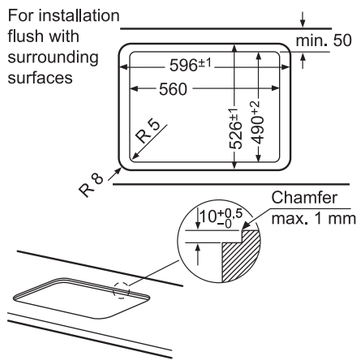

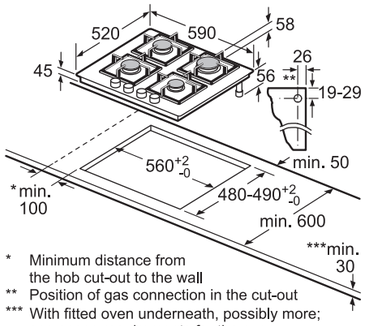

* Minimum distance from the hob cut-out to the wall
** Position of gas connection in the cut-out
*** With fitted oven underneath, possibly more; see space requirements for the oven

Gas Hobs

90CM
T29DA69N0,
T29DS69N0

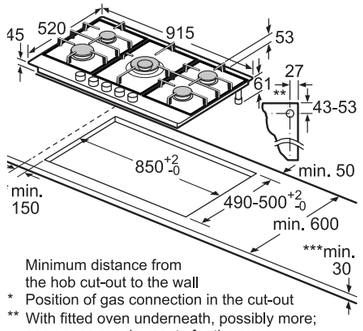

Minimum distance from the hob cut-out to the wall
* Position of gas connection in the cut-out
** With fitted oven underneath, possibly more; see space requirements for the oven

75CM
T27DA69N0,
T27DS79N0,
T27DS59N0,
T27DS59S0,
T27BB59N0

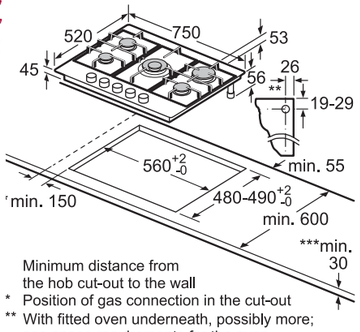

Minimum distance from the hob cut-out to the wall
* Position of gas connection in the cut-out
** With fitted oven underneath, possibly more; see space requirements for the oven

60CM
T26DA59N0,
T26DS59N0,
T26DS49N0,
T26DS49S0,
T26BB59N0

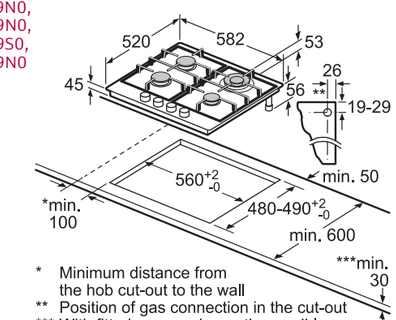

* Minimum distance from the hob cut-out to the wall
** Position of gas connection in the cut-out
*** With fitted oven underneath, possibly more; see space requirements for the oven

60CM
T26CB49S0

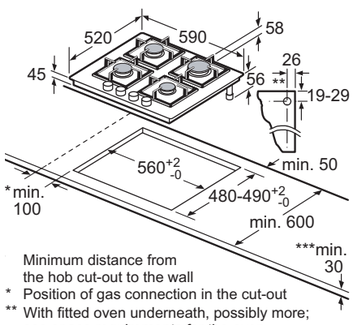

Minimum distance from the hob cut-out to the wall
* Position of gas connection in the cut-out
** With fitted oven underneath, possibly more; see space requirements for the oven

60CM
T26BR46N0,
T26BR46S0,
T26BR46W0

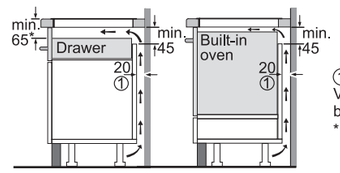

① Ventilation gap must be present
* Min. 70 for all induction hobs integrated flush with surrounding surfaces

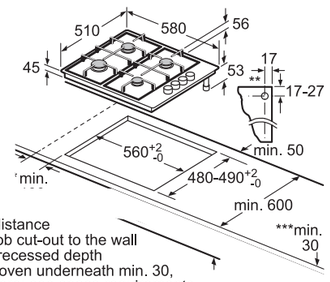

Minimum distance from the hob cut-out to the wall
' Maximum recessed depth
'** With fitted oven underneath min. 30, possibly more; see space requirements for the oven.

Electric Hobs

Venting Hobs

Width	Series	Description	Control Type	Home Connect	Colour	Model Number
80cm	N 90	2 x Flex + Ventilation, Climate Control Sensor, Extended Extended Frying Sensor	Anthracite Grey Twist Pad®	✓	Black Anthracite Grey Side Trims	V68AUX4C0
80cm	N 70	2 x Combi Zone, Extended Extended Frying Sensor	Twist Touch®	✓	Flush Black Glass	V58PHQ4C0
80cm	N 70	2 x Combi Zone, Extended Extended Frying Sensor	Twist Touch®	✓	Black Glass	V58NHQ4L0
80cm	N 50	1 x Combi Zone	Touch Control		Black Glass	V58NBS1L0
70cm	N 70	2 x Combi Zone, Extended Extended Frying Sensor	Twist Touch®		Black/Stainless steel Side Trims	V57THQ4L0
60cm	N 50	1 x Combi Zone	Touch Control		Black Glass	V56NBS1L0

Flex Induction Hobs

Width	Series	Description	Control Type	Home Connect	Colour	Model Number
90cm	N 90	2 x Flex + 32cm triple zone, Hob-Hood Control	Anthracite Grey Twist Pad®	✓	Black Glass	T69FUV4L0
90cm	N 70	2 x Flex + 32cm triple zone, Hob-Hood Control, Extended Extended Frying Sensor	Twist Touch®	✓	Black Glass	T69FHV4L0
80cm	N 90	1xFlex + 3 zones, Hob-Hood Control	Anthracite Grey Twist Pad®	✓	Black Glass	T68FUV4L0
80cm	N 70	1 x Flex + 3 zones, Hob-Hood Control, Extended Extended Frying Sensor	Twist Touch®	✓	Black Glass	T68FHV4L0
60cm	N 70	2 x Flex, Hob-Hood Control, Extended Extended Frying Sensor	Twist Touch®	✓	Black Glass	T66FHX4L0
60cm	N 70	1 x Flex + 2 zones, Hob-Hood Control, Extended Extended Frying Sensor	Twist Touch®	✓	Black Glass	T66FHE4L0

Induction Hobs

Width	Series	Description	Control Type	Home Connect	Colour	Model Number
80cm	N 70	CombiZone 5 Zones - 17 power levels, Hob-Hood Control	Twist Touch®	✓	Flush Black Glass	T58PHW1L0
80cm	N 70	CombiZone 5 Zones - 17 power levels, Hob-Hood Control	Twist Touch®	✓	Black Glass	T58FHW1L0
60cm	N 70	CombiZone 4 Zones - 17 power levels, Hob-Hood Control	Twist Touch®	✓	Black Glass	T56FHS1L0
60cm	N 30	4 zones	Touch Control		Black Glass	T36FBE1L0
60cm	N 30	4 zones, Plug & Play with GB Plug	Touch Control		Black Glass	T36FBE1L0G
60cm	N 30	9 Power levels, 4 zones, Plug & Play with GB Plug	Touch Control		Black Glass	T36CA50X1U

Quick-Light Ceramic Hobs

Width	Series	Description	Control Type	Home Connect	Colour	Model Number
80cm	N 70	4 zones, 17 power levels, Boost function	Touch Control		Black Glass	T18FDH9L
60cm	N 50	4 zones, 17 power levels	Touch Control		Black Glass	T16NBE1L
60cm	N 30	4 zones, 9 power levels	Side Control Dials		Black Glass	T16NKE0L

Gas Hobs

Width	Series	Description	Control Type	Home Connect	Colour	Model Number
90cm	N 90	Ceramic Glass, 5 burner, Flag Layout, 6.0kW Wok Burner	Flame Select®		Black/Stainless steel Top Trim	T29TS79N0
90cm	N 70	5 burner, 5.0kW Wok burner, Star Layout	Flame Select®		Stainless steel	T29DS69N0
75cm	N 70	Black Tempered Glass, 5 burner, 4.0kW Wok burner, Star Layout	Flame Select®		Black Tempered Glass	T27CS59S0
75cm	N 70	5 burner, 4.0kW Wok burner, Star Layout	Flame Select®		Stainless steel	T27DS59N0
75cm	N 70	5 burner, 5.0kW Wok burner, Flag Layout	Flame Select®		Stainless steel	T27DS79N0
75cm	N 70	5 burner, 4.0kW Wok burner, Star Layout	Flame Select®		Black	T27DS59S0
75cm	N 50	5 burner, 3.3kW Wok burner			Stainless steel	T27BB59N0
60cm	N 70	Black Tempered Glass, 4 burner	Flame Select®		Black Tempered Glass	T26CS49S0
60cm	N 70	4 burner, 3.5kW Wok burner	Flame Select®		Stainless steel	T26DS59N0
60cm	N 70	4 burner	Flame Select®		Stainless steel	T26DS49N0
60cm	N 70	4 burner	Flame Select®		Black	T26DS49S0
60cm	N 50	4 burner, 3.3kW Wok burner			Stainless steel	T26BB59N0
60cm	N 50	Black Tempered Glass, 4 burner			Black Tempered Glass	T26CB49S0
60cm	N 30	4 burner			Stainless steel	T26BR46N0
60cm	N 30	4 burner			Black	T26BR46S0

NEFF VENTILATION *Range*

Ventilation Solutions – Our Guide

Ventilation is a key consideration in every kitchen - the Hob and Hood are a focal point of all cooking setups. The kitchen design and layout will dictate the Ventilation solution that is perfect for your kitchen

NEFF have a clear and comprehensive range that can be installed in every kitchen and the following chapter will give full details of the Ventilation solutions available.

Solutions for each installation requirement are grouped together. Each sub category presented in width order to assist in choosing the correct size for the kitchen design and to complement a NEFF hob. Product specification, Accessories and Installation details then follow.

Why NEFF Ventilation?

Performance – NEFF focus on extraction performance and have options to suit all kitchen styles. Depending on whether using induction or gas there is an option for every hob.

Design – this is as important as Performance in a kitchen as the style of the hood needs to match the style and aesthetics in the kitchen – NEFF have a broad range of hoods that can be the focal point of the kitchen or installed neatly in furniture.

Connected – Using Home Connect allows the control of the hood to be done by voice or your phone making the cooking experience easier. Features such as Climate Control & Hob Hood control are further options for easy use of the Hood.

Installation – all NEFF hoods have been designed with the installation front of mind. With ducting and filters to match the installation solution – it's easy to navigate the range and order the appropriate kit. There are also installation videos to assist.

Your Guide to Control Types

Home Connect

Compatible with Amazon Alexa and Google Assistant.

Home Connect

works with alexa

Touch Control

Featured on selected models in the N90, N70 and N50 Collections. Touch Control flawlessly complements our ovens and compact appliances. An LED display is also available with selected Touch Control models.

Soft Touch Control

Available across selected models within the N70 and N50 Collection, our Soft Touch Control hoods allow for greater control over power levels. Selected models also feature a white LCD screen.

Push Button

Our classic hoods feature simple, sleek and easy to use push button controls. Available across selected models in the N30 Collection.

Remote Control

Available across all Ceiling Hood models.

Rotary Switch Control

Featured on selected Canopy Hood models within our N70 Collection, our Rotary Switch Control features a pop-out dial with 3 levels of power to choose from. When not in use the dial can be neatly popped back into place.

Rocker or Slider Switch Control

Available on our N30 Telescopic and Canopy models, our rocker or slider switch control offers a simple and straight forward setting navigation that's neatly concealed within the hood furniture.

Key Functions Guide

Features

HOME CONNECT
Control all functions and settings of your hood directly from your smart phone and voice control for the ultimate connected cooking experience.

HOB HOOD CONTROL
The Hob Hood Control allows the hood to be directly controlled from the hob. This means the hood turns on when you start cooking and, in automatic mode, can automatically regulate the power level for the best performance with the lowest noise – it also means you no longer need to worry about adjusting the hood and you can focus on your cooking.

CLIMATE CONTROL
Detects the amount of steam and smells using a sensor attached to the motor and automatically sets the most effective power level to extract it.

AMBIENT LIGHT
Illuminates your kitchen in the light that suits the occasion best. Choose from 31 colours to change how your kitchen looks and, most importantly, how it makes you feel.

EFFICIENT DRIVE MOTOR
Our Efficient Drive motor brings harmony to the kitchen. It's whisper-quiet and powerful too. Now you can focus on your cooking, and your guests, while your extractor keeps your kitchen calm, clean and serene.

NEFF SILENCE BUTTON
The unique noise reduction function reduces the fan noise by a couple of decibels, ensuring that the kitchen stays quiet while you cook and entertain your guests. This function can be used at any fan setting except fan setting 1.

SATURATION INDICATORS
Take the stress out of guessing, this function will prompt you if the grease filters should be cleaned. If the hood is installed in recirculation, this will also indicate when the charcoal filters need replacing.

BOOST POSITION
For our sleek angled glass and flat hoods, receive an extra boost of extraction performance in special cooking situations, for example when frying meat or fish. The front panel can be slightly opened during cooking to a defined extraction boost position in order to increase the steam catching rate of the hood and keep your kitchen free from steam.

Functions

AUTOMATIC AFTER-RUNNING
Continues running at a low speed for 3-30 minutes before turning itself off. Perfect for keeping fresh air in the kitchen post cooking.

INTENSIVE SETTING
Boosts the extraction rate to the maximum level to cope with particularly demanding cooking conditions.

ELECTRONIC POWER LEVEL DISPLAY
The sleek display clearly shows the selected fan power level setting.

NEFF FRESH AIR
Runs an automatic air exchange programme, turning the hood into power level 1 for 5 minutes every hour for as long as required.

AUTOMATIC REVERT
Automatically reverts the hood back to a lower power level after approximately ten minutes of being on the intensive setting.

SOFT LIGHT
Brightens or dims the lights as it's switched on or off; just press and hold to adjust the level of brightness.

Installation Options

The best way to remove steam and odours is to extract the air out of the room through ducting. Unfortunately, in apartments or where the hood is too far away from an outside wall, this may not be possible. In this case, the only alternative is to recirculate the air. Stale air is sucked through a grease filter, before being purified in a charcoal filter, and then pumped back into the kitchen via an opening in the hood.

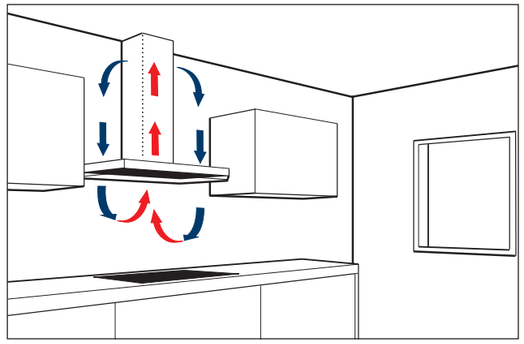

Recirculation

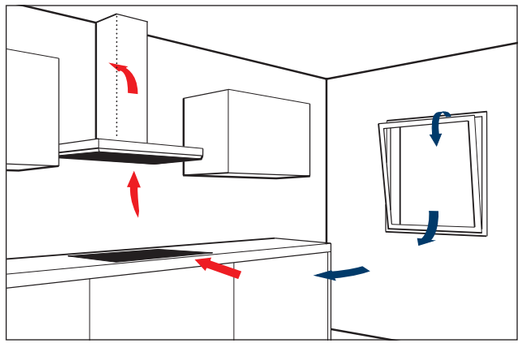

Extraction

Recirculating

Removes between 70-95% of odours depending on filter used. Requires changing of charcoal filter on a regular basis or a longer-lasting Regenerative filter for certain models can be used.

Ducted

Removes up to 98% of odours in an optimal installation. Requires planning of ducting (ducting to be sourced separately), however doesn't require a recirculation charcoal filter.

Use the following equation to calculate your extraction rate:

Volume of kitchen (length x width x height) eg. 4m x 3m x 2.5m = 30m³

6 x volume in normal operation and 12 x volume in intensive operation.

Please note that these are recommended estimates only to be used as a guide. This assumes a 2.5m standard ceiling height with 12 air changes per hour to match to an intensive extraction rate.

Regenerative Recirculation Filters

The new Regenerative Charcoal Filters give you a long lasting filter, thanks to a regenerative process using your oven, and can even be installed without a chimney piece if preferred. Benefit from up to 95% odour reduction when in recirculation mode.

Identify your extraction rate

Your extractor needs to circulate the air in the room 6 times in normal operation, 12 times in intensive operation, per hour. Use the below to help identify the required extraction rate which can then be used to select the appropriate extractor.

	2.5m	3m	3.5m	4m	4.5m	5m
2.5m	16m³					
3m	19m³	23m³				
3.5m	22m³	26m³	31m³			
4m	25m³	30m³	35m³	40m³		
4.5m	28m³	34m³	39m³	45m³	51m³	
5m	31m³	38m³	44m³	50m³	56m³	63m³

Recirculation Filters

We offer a range of recirculation filters that are available depending on the model of hood you choose. Featuring powerful odour reduction rates and performance benefits, our new regenerative filters can last up to 10 years and are regenerated through a heating process in the oven every 4 months.

TYPE :	Standard Odour Filter	Cleanair Plus Filter	Long Life Regenerative Filter
	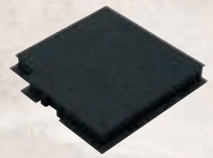	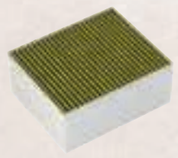	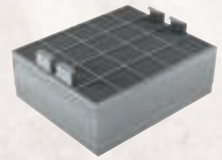
ODOUR REDUCTION	Up to 85%	Up to 95%	Up to 95% (Up to 86% if installed without a chimney)
RECOMMENDED EXCHANGE	Approx. 2 times per year	Approx. once per year	Approx. once every 10 years
KEY BENEFITS	• Simple installation • Anti-fish treatment	• Up to 3dB (A) sound reduction • Better extraction performance • Anti-fish treatment • Removes over 99% of all pollen	• Up to 3dB (A) sound reduction • Regenerated in the oven every 4 months recommended (2 hours 200°C) • Better extraction performance
INSTALLATION	Behind grease filter, inside the hood	Extra module attached to hood chimney (stainless steel) New Chimney Hoods: Integrated plastic module fitted inside the chimney piece	Extra module (as per CleanAir filter) onto chimney or inside chimney. 'Chimless' installation possible (Angled and Flat only)
INSTALLATION WITHOUT CHIMNEY POSSIBLE?	Yes (Angled and Flat only)	Yes (Angled and Flat only)	Yes (Angled and Flat only)

CleanAir Plus and Regenerative filters not available for all styles of hood. Additional module may be required to house the filter. Images for example only, different filters may come in a different size and style.

Installation

The following points should be observed for optimum ducted extraction results and low noise:

1. Ensure any pipe elbow bends are at least 30cm from the hood ducting opening.
2. Avoid reducing the diameter or area of the ducting.
3. Use wide-angled pipe elbows, but keep the number used to a minimum.
4. Only install pipes with smooth, even inner surfaces. If a flexible hose has to be used, ensure it is pulled tight to smooth out the ridges before fixing.
5. Use ducting pipes with a diameter of at least 120mm, but ideally 150mm.
6. Keep piping to a minimum – use the most direct route to an external outlet.
7. Make sure that there is an adequate supply of fresh air to replace the air ducting out of the kitchen, i.e. windows that can be opened, doors to adjacent rooms, air bricks. Problems with installation may occur if points 1-7 are not observed.

Easy Mounting System

Thanks to an easy wall-mounting system, selected hoods can be installed quickly and securely by one person. Rotating offset 'cam' fixings make it possible for positional adjustments of up to 6mm, helping to get the hood level and stable. (Not available on all our hoods.)

Island Ventilation Solutions

Open plan kitchens are growing in popularity and these solutions can create that open plan aesthetic.

Glass Draft Hood

- Modern version of a downdraft hood is a highly effective worktop ventilation solution that vanishes completely when not in use.
- A unique solution with impressive design and performance credentials
- Guided Air technology has an additional motor with a fan that creates a "V" shaped curtain of air behind the screen – pushing down cooking vapours which are captured by the extractor fan.
- Fully Automated Extraction – using Climatecontrol sensor to detect the amount of humidity and grease in the air – automatically adjusting to the correct level.
- Ambient lighting – using the Home Connect app the colours can be changed to suit the room or the vibe in the kitchen.

Venting Hob

- Designed with open plan living in mind – Extremely silent powerful ventilation.
- Generous glass surface area with a slim integrated vent creates a flexible work surface which is simple to clean.
- Easy to remove Grease filter can hold spillages of up to 200ml.
- Grease filter and holder and dishwasher safe for easy & effective cleaning
- Flex Induction & Combi Zone models available
- Choice of Controls – Twist Pad®, Touch Twist® or Touch control®.

Seamless Hob Installation

- To create a unified hob and hood installation the Glass Draft Hood can be combined with selected Induction hobs.
- Available for both 90cm and 80cm widths.

Ceiling Hood

- Designed for modern island and peninsula kitchen layouts.
- Provide high performance with low noise levels.
- Easy adjustable installation for different thickness of ceiling material and construction
- Flush mounted
- Can be used in extraction or recirculation mode
- 360° turntable motor – easy access for ducting and power connection once installed.
- Can be used with Clean Air or Regenerative filters.

Worktop Installation

- Installation can be Recirculated or Ducted out.

	90CM	80CM
	I98WMM1S7B | N90	**I88WMM1S7B | N90**
	• Guided Air Technology • Climate Control Sensor • Hob-Hood Control • Efficient Drive Motor • Home Connect • Ambient Light	• Guided Air Technology • Climate Control Sensor • Hob-Hood Control • Efficient Drive Motor • Home Connect • Ambient Light
	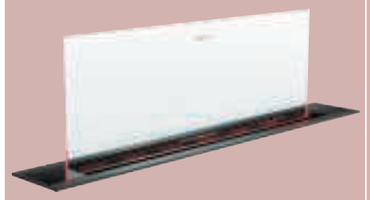	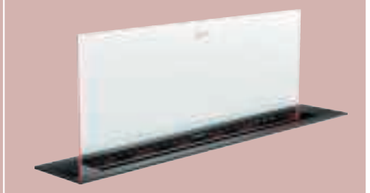
	ORDER SEAMLESS COMBINATION **Step 1 – Glass Draft Hood** Order your glass draft hood. • I98WMM1S7B **Step 2 – Induction Hob** Order your compatible Induction Hob. • T69FUV4L0 90cm Flex Induction Hob • T69FHV4L0 90cm Flex Induction Hob **Step 3 – Seamless Installation Kit** Order your Seamless Combination Kit • Z92WWY9X2	**ORDER SEAMLESS COMBINATION** **Step 1 – Glass Draft Hood** Order your glass draft hood. • I88WMM1S7B **Step 2 – Induction Hob** Order your compatible Induction Hob. • T68FUV4L0 80cm Flex Induction Hob • T58FHW1L0 80cm Flex Induction Hob • T68FHV4L0 80cm Flex Induction Hob **Step 3 – Seamless Installation Kit** Order your Seamless Combination Kit • Z92WWY8X2
SPECIAL FEATURES		
Seamless Installation to Hob Available (Check Compatibility)	●	●
Home Connect	●	●
Guided Air	●	●
Ambient Light	●	●
Climate Control Sensor	●	●
Hob-hood control	●	●
Efficient Drive	●	●
Intensive setting / Automatic intensive revert [1]	●	●
Filter Saturation Indicator	●	●
Filter Service Position	●	●
FEATURES		
Suitable for ducted operation / recirculating [2]	●	●
Power levels	3 + 2 Intensive	3 + 2 Intensive
NEFF Fresh Air (Interval operation)	●	●
Automatic after running min	10	10
Lighting	Glass rim illumination	Glass rim illumination
Type of control	Touch Control	Touch Control
PERFORMANCE / TECHNICAL INFORMATION		
Energy Rating	A	A
Appliance width mm	918	802
Extraction Rate in m³/h [3,4]		
Power level 3 - ducted / recirculating	519 / 472	501 / 447
Intensive level 1 - ducted / recirculating	656 / 543	620 / 501
Intensive level 2 - ducted / recirculating	833 / 620	775 / 562
Noise level (sound power) based on dB(A) re 1 pW [3,5]		
Power level 3 - ducted / recirculating	62 / 65	62 / 65
Intensive level 1 - ducted / recirculating	67 / 68	67 / 67
Intensive level 2 - ducted / recirculating	71 / 71	70 / 70
Extension Height mm	250	250
Pipe outlet diameter mm	150	150
Minimum distance above an electric hob / gas hob[6] mm	0 / Not Compatible	0 / Not Compatible
GB plug	●	●

Ceiling Installation Hoods

	90CM
	I95CAQ6N0B | N50
	• Hob-Hood Control • Efficient Drive Motor • Home Connect
SPECIAL FEATURES	
Home Connect	●
Hob Hood control	●
Efficient Drive	●
Intensive setting / Automatic intensive revert[1]	● / ●
NEFF Silence function	●
Filter saturation indicator	●
FEATURES	
Suitable for ducted operation / recirculating	● / ●
Power levels	3 + 2 Intensive
NEFF Fresh Air (Interval operation)	●
Automatic after running minutes	10
Lighting	4 x LED lights
Softlight with dimmer function	●
Number of metal grease filter cassettes	2
Type of control	Remote Control
PERFORMANCE / TECHNICAL INFORMATION	
Energy Rating	A
Appliance width mm	900
Extraction Rate in m³/h [3,4]	
Power level 3 ducted / recirculating	458 / 422
Intensive level 1 ducted / recirculating	594 / 513
Intensive level 2 ducted / recirculating	798 / 565
Noise level (sound power) based on dB(A) re 1 pW [3,5]	
Power level 3 ducted / recirculating	56 / 63
Intensive level 1 ducted / recirculating	62 / 67
Intensive level 2 ducted / recirculating	68 / 69
Pipe outlet diameter mm	150
Minimum distance above an electric hob / gas hob[6] mm	650 / 650
GB plug	●

[1]Power automatically reverts back to normal setting after intensive. [2]A type of recirculating kit is required if recirculating. [3]Air Flow and noise declarations made in line with CECED Code of Conduct. [4]Measured according to EN61591 on largest pipe diameter. [5]Sound power measured according to EN60704-3 on largest pipe diameter. [6]From top of pan supports. Depending on the model, a 'Recirculating odour filter kit' will consist of the following items: Charcoal filter, flexible hose, air duct, fixing components, installation instructions.

Venting Hobs

- Installed with energy efficient brushless motors that offer powerful but quiet performance.
- Can be installed in Recirculation or Ducted Out – 4 Ventilation solutions available.
- A larger Overflow container will hold up to 700ml and is integrated in the base of the appliance so will not impact on storage space below.
- To install in re-circulation mode no further components are required.

	80CM		80CM		70CM		60CM	
	V68AUX4C0 | N90		**V58PHQ4C0 | N70**		**V58NHQ4L0 | N70**		**V58NBS1L0 | N50**	
	• Anthracite Grey Twist Pad® • 2 x Flex Zones • Climate Control • Extended Frying Sensor Pro • Anthracite Grey Side Trims		• Twist Touch® Control • 2 x Combi Zones • Extended Frying Sensor Pro • Flushline Installation		• Twist Touch® Control • 2 x Combi Zones • Extended Frying Sensor Pro		• Touch Control • 4 Zones / 1 Combi zone	
KEY FEATURES								
Home Connect	●		●		●			
Integrated extractor	●		●		●		●	
Automatic extraction	Fully sensor based		Auto-On		Auto-On		Auto-On	
Favourite Button	●		●		●		●	
Extended Frying Sensor	11 settings		11 settings		11 settings			
Power Move / Power Boost / Power Transfer	/ ● / ●		/ ● /		/ ● /		/ ● /	
Flex Induction	●							
Number of Flex Induction zones	2							
Combi Zone Induction			2: Left & Right		2: Left & Right			
HOB FEATURES								
Number of individual zones	4		4		4		4	
Power Levels	17		17		17		17	
Digital display / Adaptable Volume	● / ●		● / ●		● / ●		● /	
Count up Timer / Count down timer	/ ●		/ ●		/ ●		/ ●	
Main on/off switch / Quick Start / Restart Function / Quick Stop	● / ● / ● /		● / ● / ● /		● / ● / ● /		● / ● / ● / ●	
Energy Consumption Display			●		●			
Pan Recognition /Pan Boost	● /		● /		● /		● /	
Demo Mode								
Dish Categories / Setting Recommendations	Via HC		Via HC		Via HC			
Keep Warm Function	Via HC / Favourite Button		Via HC / Favourite Button		Via HC / Favourite Button			
SAFETY FEATURES								
Residual Heat Indicator / Wipe Protection Function	● /		● /		● /		● / ●	
Timer with automatic switch off for each zone							●	
Control Panel Lock / Safety Time Switch off	● / ●		● / ●		● / ●		● / ●	
HOOD FEATURES								
Climate Control sensor	●							
Power levels	17 + 2 Intensive		9 + 2 Intensive		9 + 2 Intensive		3 + 1 Intensive	
Automatic intensive revert setting	6 minutes		6 minutes		6 minutes		6 minutes	
Automatic or manual control / Interval operation	● / ●		● / ●		● / ●		● / ●	
Automatic after running (extraction/recirculation)	12 / 30 minutes		30 minutes		30 minutes		12 / 30 minutes	
Dishwasher safe grease filter cassette with spillage collection	Yes - 200ml capacity		Yes - 200ml capacity		Yes - 200ml capacity		Yes - 200ml capacity	
Dishwasher safe spillage overflow collector	700ml capacity		700ml capacity		700ml capacity		700ml capacity	
Metal grease filter / Electronic grease filter / cleanAir filter saturation indicators	● / ● / ●		● / ● / ●		● / ● / ●		● / ● / ●	
PERFORMANCE / TECHNICAL INFORMATION – HOB								
Nominal voltage / Maximum power output V / W	220-240 / 7,400		220-240 / 7,400		220-240 / 7,400		220-240 / 7,400	
Electrical cable length cm	110		110		110		110	
Rear left Induction zone kW/mm	2.20	200x240	2.50	190x210	2.50	190x210	2.20	190x210
Rear right Induction zone kW/mm	2.20	200x240	2.50	190x210	2.50	190x210	1.80	180
Front left Induction zone kW/mm	2.20	200x240	2.50	190x210	2.50	190x210	2.20	190x210
Front right Induction zone kW/mm	2.20	200x240	2.50	190x210	2.50	190x210	2.20	210
Flex Induction zone left kW/mm	3.30	400x240						
Flex Induction zone right kW/mm	3.30	400x240						
CombiZone left kW/mm			3.60	380x210	3.60	380x210	3.60	380x210
CombiZone right kW/mm			3.60	380x210	3.60	380x210		
Rear left / right zone – with Power Boost max. kW	3.70 / 3.70		3.70 / 3.70		3.70 / 3.70		3.70 / 3.10	
Front left / right zone – with Power Boost max. kW	3.70 / 3.70		3.70 / 3.70		3.70 / 3.70		3.70 / 3.70	
PERFORMANCE / TECHNICAL INFORMATION – EXTRACTOR								
Extractor energy efficiency rating	B		B		B		B	
Extraction Rate in m³/h[1,2]								
Ducted / Recirculating power level Minimum	154 / 132		154 / 117		154 / 117		330 / 252	
Ducted / Recirculating power level Maximum	500 / 499		500 / 487		500 / 487		500 / 441	
Ducted / Recirculating power level Intensive	622 / 595		622 / 595		622/ 595		622 /595	
Noise level (sound power) based on dB(A) re 1 pW[1,3]								
Ducted / Recirculating power level Minimum	42 / 41		42 / 41		42 / 41		61 / 55	
Ducted / Recirculating power level Maximum	69 / 68		69 / 68		69 / 68		69 / 66	
Ducted / Recirculating power level Intensive	74 / 72		74 / 72		74 / 72		74 / 72	
Motor power	170		170		170		170	

	70CM		60CM	
	V57THQ4L0 | N70		**V56NBS1L0 | N50**	
	• Twist Touch® Control • 2 x Combi Zones • Extended Frying Sensor Pro • Stainless Steel Side Trims		• Touch Control • 4 Zones / 1 Combi zone	
KEY FEATURES				
Home Connect	●			
Integrated extractor	●		●	
Automatic extraction	Auto-On		Auto-On	
Favourite Button	●		●	
Extended Frying Sensor	11 settings			
Power Move / Power Boost / Power Transfer	/ ● /		/ ● /	
Flex Induction				
Number of Flex Induction zones				
Combi Zone Induction	2: Left & Right			
HOB FEATURES				
Number of individual zones	4		4	
Power Levels	17		17	
Digital display / Adaptable Volume	● / ●		● /	
Count up Timer / Count down timer	/ ●		/ ●	
Main on/off switch / Quick Start / Restart Function / Quick Stop	● / ● / ● /		● / ● / ● / ●	
Energy Consumption Display	●			
Pan Recognition /Pan Boost	● / ●		● /	
Demo Mode				
Dish Categories / Setting Recommendations	Via HC			
Keep Warm Function	Via HC / Favourite Button			
SAFETY FEATURES				
Residual Heat Indicator / Wipe Protection Function	● /		● / ●	
Timer with automatic switch off for each zone			●	
Control Panel Lock / Safety Time Switch off	● / ●		● / ●	
HOOD FEATURES				
Climate Control sensor				
Power levels	9 + 2 Intensive		3 + 1 Intensive	
Automatic intensive revert setting	6 minutes		6 minutes	
Automatic or manual control / Interval operation	● / ●		● / ●	
Automatic after running (extraction/recirculation)	30 minutes		12 / 30 minutes	
Dishwasher safe grease filter cassette with spillage collection	Yes - 200ml capacity		Yes - 200ml capacity	
Dishwasher safe spillage overflow collector	700ml capacity		700ml capacity	
Metal grease filter / Electronic grease filter / cleanAir filter saturation indicators	● / ● / ●		● / ● / ●	
PERFORMANCE / TECHNICAL INFORMATION – HOB				
Nominal voltage / Maximum power output V / W	220-240 / 7,400		220-240 / 7,400	
Electrical cable length cm	110		110	
Rear left Induction zone kW/mm	2.50	190x210	2.20	190x210
Rear right Induction zone kW/mm	2.50	190x210	1.40	145
Front left Induction zone kW/mm	2.50	190x210	2.20	190x210
Front right Induction zone kW/mm	2.50	190x210	2.20	210
Flex Induction zone left kW/mm				
Flex Induction zone right kW/mm				
CombiZone left kW/mm	3.60	380x210	3.60	380x210
CombiZone right kW/mm	3.60	380x210		
Rear left / right zone – with Power Boost max. kW	3.70 / 3.70		3.70 / 2.20	
Front left / right zone – with Power Boost max. kW	3.70 / 3.70		3.70 / 3.70	
PERFORMANCE / TECHNICAL INFORMATION – EXTRACTOR				
Extractor energy efficiency rating	B		B	
Extraction Rate in m³/h[1,2]				
Ducted / Recirculating power level Minimum	154 / 117		330 / 252	
Ducted / Recirculating power level Maximum	500 / 487		500 / 441	
Ducted / Recirculating power level Intensive	622/ 595		622 /595	
Noise level (sound power) based on dB(A) re 1 pW[1,3]				
Ducted / Recirculating power level Minimum	42 / 41		61 / 55	
Ducted / Recirculating power level Maximum	69 / 68		69 / 66	
Ducted / Recirculating power level Intensive	74 / 72		74 / 72	
Motor power	170		170	

[1] Air flow and noise declarations made in line with CECED Code Of Conduct. [2]Measured according to EN61591 on largest pipe diameter. [3]Sound power measured according to EN60704-3 on largest pipe diameter.

Wall Mounted Ventilation Solutions

Hoods installed on the wall can be used to create a design feature in themselves, adding a focal point to your kitchen while offering powerful extraction for all types of cooking.

Angled Glass

- Inclined front with dimmable LED mood lighting.
- Fully automatic air sensor.
- Whisper quiet ventilation.
- Chimless or Chimney options.

Pyramid Chimney

- Traditional styled.
- Broad variety of sizes & specifications.
- Quiet operation.

Box Chimney

- Classic box design.
- Highly Efficient.
- Quiet operation.
- LED low energy lighting.

Slim Pyramid Chimney

- Flatter profile.
- Broad variety of sizes & specifications.
- Quiet operation.

Wall Installation Hoods

	90CM	80CM	80CM		60CM	
	D98IPT2S0B | N90	**D88IAN2S0B | N70**	**D85IFN1S0B | N50**	**D83IDK1S0B | N30**	**D65IFN1S0B | N50**	**D63IDK1S0B | N30**
	• Hob-Hood Control • ClimateControl Sensor • Efficient Drive Motor • Home Connect • Adjustable Lighting	• Hob-Hood Control • Smart Hood Automatic • Efficient Drive Motor • Home Connect • Adjustable Lighting	• Hob-Hood Control • Smart Hood Automatic • Efficient Drive Motor • Home Connect • Adjustable Lighting		• Hob-Hood Control • Smart Hood Automatic • Efficient Drive Motor • Home Connect • Adjustable Lighting	
SPECIAL FEATURES						
Home Connect	●	●	●		●	
Adjustable LED White Colour Temperature	●	●	●		●	
Ambient Light						
Climate Control Sensor	●					
Smart Hood Automatic		●	●		●	
Hob-hood control	●	●	●		●	
Efficient Drive	●	●	●		●	
Intensive setting / Automatic intensive revert [1]	● / ●	● / ●	● / ●	● / ●	● / ●	● / ●
Boost Position (Angled & Flat Hoods)	●	●	●	●	●	●
Filter Saturation Indicator	●	via HomeConnect	via HomeConnect		via HomeConnect	
FEATURES						
Suitable for ducted operation / recirculating [2]	● / ●	● / ●	● / ●	● / ●	● / ●	● / ●
Electronic power level display	●	●	●	●	●	●
Power levels	3 + 2 Intensive	3 + 1 Intensive	3 + 1 Intensive	3 + 1 Intensive	3 + 1 Intensive	3 + 1 Intensive
Automatic after running minutes	10	10	10		10	
Lighting	2 x LED lights	2 x LED lights	2 x LED lights	2 x LED lights	2 x LED lights	2 x LED lights
Type of control	Touch Control	Touch Control	Touch Control	Touch Control	Touch Control	Touch Control
PERFORMANCE / TECHNICAL INFORMATION						
Energy Rating	A+	A+	A+	A	A+	A
Appliance width mm	890	790	790	790	590	590
Extraction Rate in m³/h [3,4]						
Power level 3 - ducted / recirculating	441 / 435	432 / 433	431 / 429	430 / 445	431 / 429	430 / 445
Intensive level 1 - ducted / recirculating	753 / 752	915 / 896	768 / 724	550 / 550	768 / 724	550 / 550
Intensive level 2 - ducted / recirculating	1007 / 964					
Noise level (sound power) based on dB(A) re 1 pW [3,5]						
Power level 3 - ducted / recirculating	51 / 59	51 / 59	56 / 62	60 / 69	56 / 62	60 / 69
Intensive level 1 - ducted / recirculating	65 / 72	68 / 76	68 / 74	65 / 72	68 / 74	65 / 72
Intensive level 2 - ducted / recirculating	70 / 78					
Pipe outlet diameter mm	150	150	150	150	150	150
Minimum distance above an electric hob / gas hob6 mm	450 / 650	450 / 650	450 / 650	450 / 650	450 / 650	450 / 650
GB plug	●	●	●	●	●	●

[1]Power automatically reverts back to normal setting after intensive. [2]A type of recirculating kit is required if recirculating. [3]Air Flow and noise declarations made in line with CECED Code of Conduct. [4]Measured according to EN61591 on largest pipe diameter. [5]Sound power measured according to EN60704-3 on largest pipe diameter. [6]From top of pan supports. Depending on the model, a 'Recirculating odour filter kit' will consist of the following items: Charcoal filter, flexible hose, air duct, fixing components, installation instructions.

Box Chimney Hoods

	90CM		
	D95BMP5N0B | N70	D94BHM1S5B | N50	D94BHM1N0B | N50
	• Efficient Drive Motor • Touch Control • Automatic After Run	• Touch Control	• Touch Control
SPECIAL FEATURES			
Efficient Drive	●		
Intensive setting / Automatic intensive revert[1]	● / ●	● / ●	● / ●
NEFF Silence function	●		
Filter saturation indicator	●		
FEATURES			
Suitable for ducted operation/recirculating[2]	● / ●	● / ●	● / ●
Electronic power level display	●		
Power levels	3 + 2 Intensive	3 + 2 Intensive	3 + 1 Intensive
NEFF Fresh Air (Interval operation)	●		
Automatic after running minutes	10		
Lighting	3 x LED lights	3 x LED lights	2 x LED lights
Softlight with dimmer function	●		
Type of control	Touch Control	Touch Control	Touch Control
PERFORMANCE / TECHNICAL INFORMATION			
Energy Rating	A	B	B
Appliance width mm	898	900	900
Extraction Rate in m³/h[3,4]			
Power level 3 ducted / recirculating	427/324	372 / 290	372 / 290
Intensive level 1 ducted / recirculating	525/352	604 / 360	604 / 360
Intensive level 2 ducted / recirculating	702/378		
Noise level (sound power) based on dB(A) re 1 pW[3,5]			
Power level 3 ducted / recirculating	55/70	60 / 71	60 / 71
Intensive level 1 ducted / recirculating	60/72	70 / 75	70 / 75
Intensive level 2 ducted / recirculating	66/73		
Pipe outlet diameter mm	150/120	150/120	150 / 120
Minimum distance above an electric hob / gas hob[6] mm	550 / 650	550 / 650	550 / 650
GB plug	●	●	●

	90CM	60CM			
	D92BBC0S0B | N30	D65BMP5N0B | N70	D64BHM1N0B | N50	D62BBC0N0B | N30	D62BBC0S0B | N30
		• Efficient Drive Motor • Touch Control • Automatic After Run	• Touch Control		
SPECIAL FEATURES					
Efficient Drive		●			
Intensive setting / Automatic intensive revert[1]		● / ●	● / ●		
NEFF Silence function		●			
Filter saturation indicator		●			
FEATURES					
Suitable for ducted operation/recirculating[2]	● / ●	● / ●	● / ●	● / ●	● / ●
Electronic power level display		●			
Power levels	3	3 + 2 Intensive	3 + 1 Intensive	3	3
NEFF Fresh Air (Interval operation)		●			
Automatic after running minutes		10			
Lighting	2 x LED lights	2 x LED lights	2 x LED lights	2 x LED lights	2 x LED lights
Softlight with dimmer function		●			
Type of control	Push Buttons	Touch Control	Touch Control	Push Buttons	Push Buttons
PERFORMANCE / TECHNICAL INFORMATION					
Energy Rating	D	A	B	D	D
Appliance width mm	900	598	600	600	600
Extraction Rate in m³/h[3,4]					
Power level 3 ducted / recirculating	365 / 240	413 / 281	368 / 281	365 / 197	365 / 197
Intensive level 1 ducted / recirculating		503 / 299	605 / 348		
Intensive level 2 ducted / recirculating		657 / 322			
Noise level (sound power) based on dB(A) re 1 pW[3,5]					
Power level 3 ducted / recirculating	64 / 65	61 / 72	60 / 71	63 / 66	63 / 66
Intensive level 1 ducted / recirculating		66 / 74	69 / 75		
Intensive level 2 ducted / recirculating		71 / 75			
Pipe outlet diameter mm	150 / 120	150 / 120	150 / 120	150 / 120	150 / 120
Minimum distance above an electric hob / gas hob[6] mm	550 / 650	550 / 650	550 / 650	550 / 650	550 / 650
GB plug	●	●	●	●	●

[1]Power automatically reverts back to normal setting after intensive. [2]A type of recirculating kit is required if recirculating. [3]Air Flow and noise declarations made in line with CECED Code of Conduct. [4]Measured according to EN61591 on largest pipe diameter. [5]Sound power measured according to EN60704-3 on largest pipe diameter. [6]From top of pan supports. Depending on the model, a 'Recirculating odour filter kit' will consist of the following items: Charcoal filter, flexible hose, air duct, fixing components, installation instructions.

Slim Pyramid Chimney Hoods

	90CM	90CM
	D94QFM1N0B | N50	**D64QFM1N0B | N50**
SPECIAL FEATURES		
Intensive setting / Automatic intensive revert[1]	● / ●	● / ●
FEATURES		
Suitable for ducted operation/recirculating[2]	● / ●	● / ●
Power levels	3 + 1 Intensive	3 + 1 Intensive
Lighting	2 x LED lights	2 x LED lights
Type of control	Touch Control	Touch Control
PERFORMANCE / TECHNICAL INFORMATION		
Energy Rating	A	A
Appliance width mm	900	600
Extraction Rate in m³/h[3,4]		
Power level 3 ducted / recirculating	389 / 308	410 / 312
Intensive level 1 ducted / recirculating	642 / 372	644 / 372
Intensive level 2 ducted / recirculating		
Noise level (sound power) based on dB(A) re 1 pW[3,5]		
Power level 3 ducted / recirculating	61 / 71	62 / 72
Intensive level 1 ducted / recirculating	70 / 75	70 / 75
Intensive level 2 ducted / recirculating	150 / 120	150 / 120
Pipe outlet diameter mm	550 / 650	550 / 650
Minimum distance above an electric hob / gas hob[6] mm	550 / 650	550 / 650
GB plug	●	●

Pyramid Chimney Hoods

	90CM	75CM	60CM
	D92PBC0N0B | N30	**D72PBC0N0B | N30**	**D62PBC0N0B | N30**
FEATURES			
Suitable for ducted operation/recirculating	● / ●	● / ●	● / ●
Electronic power level display			
Power levels	3	3	3
NEFF Fresh Air (Interval operation)			
Automatic after running minutes			
Lighting	2 x LED lights	2 x LED lights	2 x LED lights
Softlight with dimmer function			
Number of metal grease filter cassettes	2	2	2
Type of control	Push Buttons	Push Buttons	Push Buttons
PERFORMANCE / TECHNICAL INFORMATION			
Energy Rating	D	D	D
Appliance width mm	900	750	600
Extraction Rate in m³/h[3,4]			
Power level 1 ducted / recirculating	198 / 129	198 / 129	198 / 127
Power level 2 ducted / recirculating	263 / 174	263 / 174	263 / 171
Power level 3 ducted / recirculating	365 / 213	365 / 213	365 / 211
Noise level (sound power) based on dB(A) re 1 pW[3,5]			
Power level 1 ducted / recirculating	50 / 56	50 / 56	50 / 55
Power level 2 ducted / recirculating	57 / 62	57 / 62	58 / 62
Power level 3 ducted / recirculating	65 / 67	65 / 67	66 / 67
Pipe outlet diameter mm	150/120	150/120	150/120
Minimum distance above an electric hob / gas hob[6] mm	550 / 650	550 / 650	550 / 650
GB plug	●	●	●

[1]Power automatically reverts back to normal setting after intensive. [2]A type of recirculating kit is required if recirculating. [3]Air Flow and noise declarations made in line with CECED Code of Conduct. [4]Measured according to EN61591 on largest pipe diameter. [5]Sound power measured according to EN60704-3 on largest pipe diameter. [6]From top of pan supports. Depending on the model, a 'Recirculating odour filter kit' will consist of the following items: Charcoal filter, flexible hose, air duct, fixing components, installation instructions.

Integrated Furniture Ventilation Solutions

A great fit

When cooking up a meal for friends and family the last thing you want is the noise of a hood in the background. Our integrated furniture hoods are built to operate on low noise levels while maintaining high air quality in your kitchen. Choose between telescopic and integrated hoods to find the hood that fits your kitchen, and cooking style, best.

Integrated Design Hood – Invisible design for that seamless finish

- Designed to fit neatly under an overhead unit.
- Integrated Hoods are discreet and save valuable kitchen space.
- Extra Storage Space – The hood's T-shaped design creates extra space for many large and handy items up to 10kg on each side.
- Reduced Noise: the low-noise motor makes it possible to listen to your own kitchen story.
- Your kitchen deserves the best in lighting design. Our hoods with LED Lighting not only look good, they help you focus, whatever you're cooking.

Telescopic Hood

- For a smaller kitchen where space is at a premium, these clever hoods pull out from underneath a cabinet when required.

Integrated Hood

- These hoods look like they're part of the furniture.
- Hidden behind a unit door, they simply pull out when needed.

Telescopic Hoods

	90CM	60CM	
	D49ED22N1B | N50	D46ED22N1B | N50	D46BR22N1B | N30
	• Efficient Drive Motor • Automatic After Run	• Efficient Drive Motor • Automatic After Run	
SPECIAL FEATURES			
Intensive setting / Automatic intensive revert [1]	● / ●	● / ●	
Efficient Drive	●	●	
FEATURES			
Suitable for ducted operation / recirculating [2]	● / ●	● / ●	● / ●
Furniture door required	●	●	●
Automatic after running minutes	10	10	
Lighting	3 x LED lights	2 x LED lights	2 x LED lights
Controls	Soft touch	Soft touch	Rocker switch
Power levels	3 + 1 Intensive	3 + 1 Intensive	3
PERFORMANCE / TECHNICAL INFORMATION			
Energy	A	A	B
Appliance width mm	898	598	598
Extraction Rate in m³/h [3,4]			
Ducted power level 3 / recirculating power level 3	266 / 166	271 / 174	387 / 195
Intensive level 1 - ducted / recirculating	412 / 178	405 / 189	
Noise level (sound power) based on dB(A) re 1 pW [3,5]			
Ducted power level 3 / recirculating power level 3	63 / 70	62 / 70	67 / 74
Intensive level 1 - ducted / recirculating	70 / 71	69 / 72	
Pipe outlet diameter mm	150/120	150/120	150/120
Minimum distance above an electric hob / gas hob[6] mm	430 / 650	430 / 650	430 / 650
GB plug	●	●	●

[1]Power automatically reverts back to normal setting after intensive. [2]A type of recirculating kit is required if recirculating. [3]Air Flow and noise declarations made in line with CECED Code of Conduct. [4]Measured according to EN61591 on largest pipe diameter. [5]Sound power measured according to EN60704-3 on largest pipe diameter. [6]From top of pan supports. Depending on the model, a 'Recirculating odour filter kit' will consist of the following items: Charcoal filter, flexible hose, air duct, fixing components, installation instructions.

Canopy Hoods

	70CM			50CM		
	D57ML67N1B | N90	D57MH56N0B | N50	D5855X1GB | N30	D55MH56N0B | N50	D5655X1GB | N30	D51NAA1C0B | N30
	• Automatic After Run					
SPECIAL FEATURES						
Intensive setting / Automatic intensive revert [1]	● / ●	● / ●	● /	● / ●	● /	
Filter saturation indicator	●					
FEATURES						
Suitable for ducted operation / recirculating [2]	● / ●	● / ●	● / ●	● / ●	● / ●	● / ●
Automatic after running minutes	30					
Lighting	2 x LED lights	2 x LED lights	2 x LED lights	2 x LED lights	2 x LED lights	2 x LED lights
Softlight with dimmer function	●					
Controls	Soft Touch	Soft Touch	Slider switch	Soft Touch	Slider switch	Slider switch
Power levels	3 + 1 Intensive	3 + 1 Intensive	3 + 1 Intensive	3 + 1 Intensive	3 + 1 Intensive	3
PERFORMANCE / TECHNICAL INFORMATION						
Energy	A++	C	C	C	C	D
Appliance width mm	700	700	730	520	530	530
Extraction Rate in m³/h [3,4]						
Ducted power level 3 / recirculating power level 3	575 / 533	630 / 300	379 / 278	575 / 280	362 / 268	302 / 300
Ducted intensive / recirculating intensive	775 / 722	730 / 310	638 / 408	650 / 290	618 / 395	
Noise level (sound power) based on dB(A) re 1 pW [3,5]						
Ducted power level 3 / recirculating power level 3	64 / 71	66/73	56 / 65	67 / 73	56 / 64	62 / 65
Ducted intensive / recirculating intensive	70 / 77	69/74	68 / 72	70 / 74	68 / 72	
Pipe outlet diameter mm	150/120	150/120	150/120	150/120	150/120	120
Minimum distance above an electric hob / gas hob[6] mm	550 / 650	550 / 650	550 / 650	550 / 650	550 / 650	550 / 650
GB plug	●	●	●	●	●	●

[1]Power automatically reverts back to normal setting after intensive. [2]A type of recirculating kit is required if recirculating. [3]Air Flow and noise declarations made in line with CECED Code of Conduct. [4]Measured according to EN61591 on largest pipe diameter. [5]Sound power measured according to EN60704-3 on largest pipe diameter. [6]From top of pan supports. Depending on the model, a 'Recirculating odour filter kit' will consist of the following items: Charcoal filter, flexible hose, air duct, fixing components, installation instructions.

Integrated Hoods

60CM

	D64MAC1X0B | N30	D61MAC1X0B | N30
FEATURES		
Suitable for ducted operation / recirculating [2]	● / ●	● / ●
Furniture door required	●	●
Lighting	2 x LED lights	2 x LED lights
Controls	Push buttons	Push buttons
Power levels	3	3
Number of metal grease filter cassettes	2	2
PERFORMANCE / TECHNICAL INFORMATION		
Energy	B	D
Appliance width mm	599	599
Extraction Rate in m³/h [3,4]		
Ducted power level 1 / recirculating power level 1	256 / 208	240 / 224
Ducted power level 2 / recirculating power level 2	352 / 320	288 / 256
Ducted power level 3 / recirculating power level 3	625 / 416	368 / 272
Noise level (sound power) based on dB(A) re 1 pW [3,5]		
Ducted power level 1 / recirculating power level 1	49 / 57	52 / 64
Ducted power level 2 / recirculating power level 2	56 / 68	56 / 67
Ducted power level 3 / recirculating power level 3	70 / 75	62 / 68
Pipe outlet diameter mm	150 / 120	150 / 120
Minimum distance above an electric hob / gas hob[6] mm	500 / 650	500 / 650
GB plug	●	●

Integrated Design Hoods

	90CM	60CM
	D95XAM2S0B | N70	D65XAM2S0B | N70
	• 10kg Storage Each Side	• 10kg Storage Each Side
SPECIAL FEATURES		
Storage Space	10kg each side	10kg each side
Intensive setting / Automatic intensive revert [1]	● / ●	● / ●
FEATURES		
Suitable for ducted operation / recirculating	● / ●	● / ●
Power levels	3 + 1 Intensive	3 + 1 Intensive
Lighting	2 x LED lights	2 x LED lights
Type of control	Touch Control	Touch Control
PERFORMANCE / TECHNICAL INFORMATION		
Energy	B	B
Appliance width mm	897	597
Extraction Rate in m³/h [3,4]		
Power level 3 - ducted / recirculating	460 / 451	460 / 451
Intensive level 1 - ducted / recirculating	749 / 652	749 / 652
Noise level (sound power) based on dB(A) re 1 pW [3,5]		
Power level 3 - ducted / recirculating	63 / 67	63 / 67
Intensive level 1 - ducted / recirculating	73 / 74	73 / 74
Pipe outlet diameter mm	150 / 120	150 / 120
Minimum distance above an electric hob / gas hob[6] mm	430 / 650	430 / 650
GB plug	●	●

[1]Power automatically reverts back to normal setting after intensive. [2]A type of recirculating kit is required if recirculating. [3]Air Flow and noise declarations made in line with CECED Code of Conduct. [4]Measured according to EN61591 on largest pipe diameter. [5]Sound power measured according to EN60704-3 on largest pipe diameter. [6]From top of pan supports. Depending on the model, a 'Recirculating odour filter kit' will consist of the following items: Charcoal filter, flexible hose, air duct, fixing components, installation instructions.

Island Hood Ranges

CEILING HOODS						
Width	Series	Description	Hob Hood Control /Remote Control	Home Connect	Colour	Model Number
90cm	N50	90 x 50cm, LED lights.	● / ●	✓	Stainless steel	I95CAQ6N0B
WORKTOP INSTALLATION						
90cm	N90	New Guided Air, Climate Control Sensor, touch control, remote mountable motor up to 3m, with Ambient Light.	● /	✓	Black with clear glass	I98WMM1S7B
80cm	N90	New Guided Air, Climate Control Sensor, touch control, remote mountable motor up to 3m, with Ambient Light.	● /	✓	Black with clear glass	I88WMM1S7B

Wall Mounted Hood Ranges

ANGLED GLASS CHIMNEY HOODS						
Width	Series	Description	Hob Hood Control /Remote Control	Home Connect	Colour	Model Number
90cm	N90	Touch Control with illuminated sensors, Ambient light, Climate Control Sensor, LED Lights.	● / ●	✓	Black Glass & Stainless steel chimney	D98IPT2S0B
90cm	N50	Touch Control, LED Lights.	● / ●	✓	Black Glass & Stainless steel chimney	D88IAN2S0B
80cm	N30	Single Pane Angled Glass Chimney Hood, SoftTouch Control, LED Lights.	● / ●	✓	Black Glass & Stainless steel control	D85IEE1S0B
80cm	N30	Angled Chimney Hood, Touch Control, LED Lights.	● / ●	✓	Black Glass & Stainless steel control	D83IDK1S0B
60cm	N50	Touch Control, LED Lights.	● / ●	✓	Black Glass & Black Chimney	D65IFN1S0B
60cm	N30	60cm, Angled Chimney Hood, Touch Control, LED Lights.	● / ●	✓	Black Glass & Stainless steel control	D63IDK1S0B
BOX CHIMNEY HOODS						
90cm	N70	Inlay Box Design, Touch Control, 3 speed + 2 intensive, LED lights.			Stainless steel	D95BMP5N0B
90cm	N50	Inlay Box Design, 3 speed + intensive, electronic, Touch Control, LED lights.			Black Glass	D94BHM1S5B*
90cm	N50	Inlay Box Design, 3 speed + intensive, electronic, Touch Control, LED lights.			Stainless steel	D94BHM1N0B
90cm	N30	Box Design, 3 speed, push buttons, LED lights.			Black Glass	D92BBC0S0B*
60cm	N70	Inlay Box Design, Touch Control, 3 speed + 2 intensive, LED lights.			Stainless steel	D65BMP5N0B
60cm	N50	Inlay Box Design, 3 speed + intensive, electronic, Touch Control, LED lights.			Stainless steel	D64BHM1N0B
60cm	N30	Box Design, 3 speed, push buttons, LED lights.			Stainless steel	D62BBC0N0B
60cm	N30	Box Design, 3 speed, push buttons, LED lights.			Black Glass	D62BBC0S0B*
PYRAMID CHIMNEY HOODS						
90cm	N30	3 speed, LED lights.			Stainless steel	D92PBC0N0B
75cm	N30	3 speed, LED lights.			Stainless steel	D72PBC0N0B
60cm	N30	3 speed, LED lights.			Stainless steel	D62PBC0N0B
SLIM PYRAMID CHIMNEY HOODS						
90cm	N50	3 speed + intensive, electronic, Touch Control, LED lights.			Stainless steel	D94QFM1N0B
60cm	N50	3 speed + intensive, electronic, Touch Control, LED lights.			Stainless steel	D64QFM1N0B

*Check online for further details.

Integrated Hood Ranges

TELESCOPIC HOODS						
Width	Series	Description	Hob Hood Control /Remote Control	Home Connect	Colour	Model Number
90cm	N50	3 speed + 1 Intensive, Easy Electronic Controls, LED lights.			Stainless Steel	D49ED22N1B
60cm	N50	3 speed + 1 Intensive, Easy Electronic Controls, LED lights.			Stainless Steel	D46ED22N1B
60cm	N30	3 speed, Rocker Switch Controls, LED lights.			Metallic silver	D46BR22N1B
CANOPY HOODS						
73cm	N30	3 speeds + intensive, LED lights.			Metallic silver	D5855X1GB
70cm	N90	Rim Ventilation Design, 3 speed + intensive, electronic, LED lights.			Stainless steel & black glass	D57ML67N1B
70cm	N50	Rim Ventilation Design, 3 speed + intensive, electronic, LED lights.			Stainless steel	D57MH56N0B
53cm	N30	3 speeds + intensive, LED lights.			Metallic silver	D5655X1GB
53cm	N30	3 speed, LED lights, Quick fix system, Slider switch.			Metallic silver	D51NAA1C0B
52cm	N50	Rim Ventilation Design, 3 speed + intensive, electronic, LED lights.			Stainless steel	D55MH56N0B
INTEGRATED HOODS						
60cm	N30	3 speed, push buttons, LED lights, high extraction rate.			Metallic silver	D64MAC1X0B
60cm	N30	3 speed, push buttons, LED lights.			Metallic silver	D61MAC1X0B
INTEGRATED DESIGN HOODS						
90cm	N70	Flush Integrated design with fold out glass panel. LED lighting - automatic on opening glass, 3 Speed + 1 Intensive, Touch Control.			Black body & fold out glass panel	D95XAM2S0B
60cm	N70					D65XAM2S0B

Hood Accessories

	VIB DETAILS	PRE-SALE ACCESSORIES				POST-SALES ACCESSORIES					
Type	**VIB**	**Standard Recirculation Kit**	**CleanAir Standard Recirculation Kit**	**CleanAir Plus Recirculation Kit**	**CleanAir Plus Recirculation Kit (for chimless installation)**	**Long-Life Regenerative Recirculation Kit**	**Long-Life Regenerative Recirculation Kit (for chimless installation)**	**Standard Odour Filter Replacement**	**CleanAir Stanadrd Filter Replacement**	**CleanAir Plus Filter Replacement**	**Long-Life Filter Replacement**
Glass Draft	I88WMM1S7B			Z92WWI1X6 Z92WWI1X7		Z92WWJ11 Z92WWJ12				Z50XXP0X0	
	I98WMM1S7B										
Ceiling	I95CAQ6N0B			Z52JCC1N6		Z52JCD0N0				Z53XXB1X6	
Angled Glass Wall Hoods	D63IDK1S0B	Z51GIU1X3						Z51GIA1X3			
	D83IDK1S0B										
	D65IFN1S0B			Z51KII1X6	Z51KIV1X6					Z51KIB1X6	
	D85IFN1S0B										
	D88IAN2S0B			Z51BII1X6	Z51BIV1X6	Z51BIS1X1	Z51BIR1X1			Z51BIB1X6	Z51BIP1X1
	D98IPT2S0B										
Box Chimney	D62BBC0S0B		Z51DXI1X4	Z51DXI1X6					Z51DXB1X4	Z53XXB1X6	
	D92BBC0S0B										
	D94BHM1S5B					Z51FXJ0X0					Z50XXP0X0
	D62BBC0N0B										
	D64BHM1N0B										
	D94BHM1N0B										
	D65BMP5N0B		Z51CBI1X4	Z51CXI1X6		Z51FXJ0X5			Z53CXB1X4		
	D95BMP5N0B		Z51CBI2X4			Z51FXJ0X5			Z53CBB2X4		
Slim Pyramid	D64QFM1N0B		Z51DXI1X4	Z51DXI1X6		Z51FXJ0X0			Z51DXB1X4	Z53XXB1X6	Z50XXP0X0
	D94QFM1N0B										
Pyramid	D62PBC0N0B	Z5138X5						Z5138X1			
	D72PBC0N0B										
	D92PBC0N0B										
Integrated Design	D65XAM2S0B		Z51IBI6X4	Z51IXC1X6		Z51ITD1X1			Z51IBB6X4	Z51IXB1X6	Z51ITP0X0
	D95XAM2S0B										
Telescopic	D46BR22N1B		Z51ITI1X4						Z51ITB1X4		
	D46ED22N1B										
	D49ED22N1B										
Canopy	D51NAA1C0B	Z51INT0X0						Z51INA0X0			
	D55MH56N0B	Z5135X3		Z51IXC1X6		Z51ITD1X1		Z5135X1		Z51IXB1X6	Z51ITP0X0
	D57MH56N0B										
	D57ML67N1B										
	D5655X1GB	Z5155X0						Z5155X0			
	D5855X1GB										
Integrated Hoods	D61MAC1X0B	Z51IMA0X0						Z51IMA0X0			
	D64MAC1X0B										

Worktop Installation Hoods

90CM
I98WMM1S7B

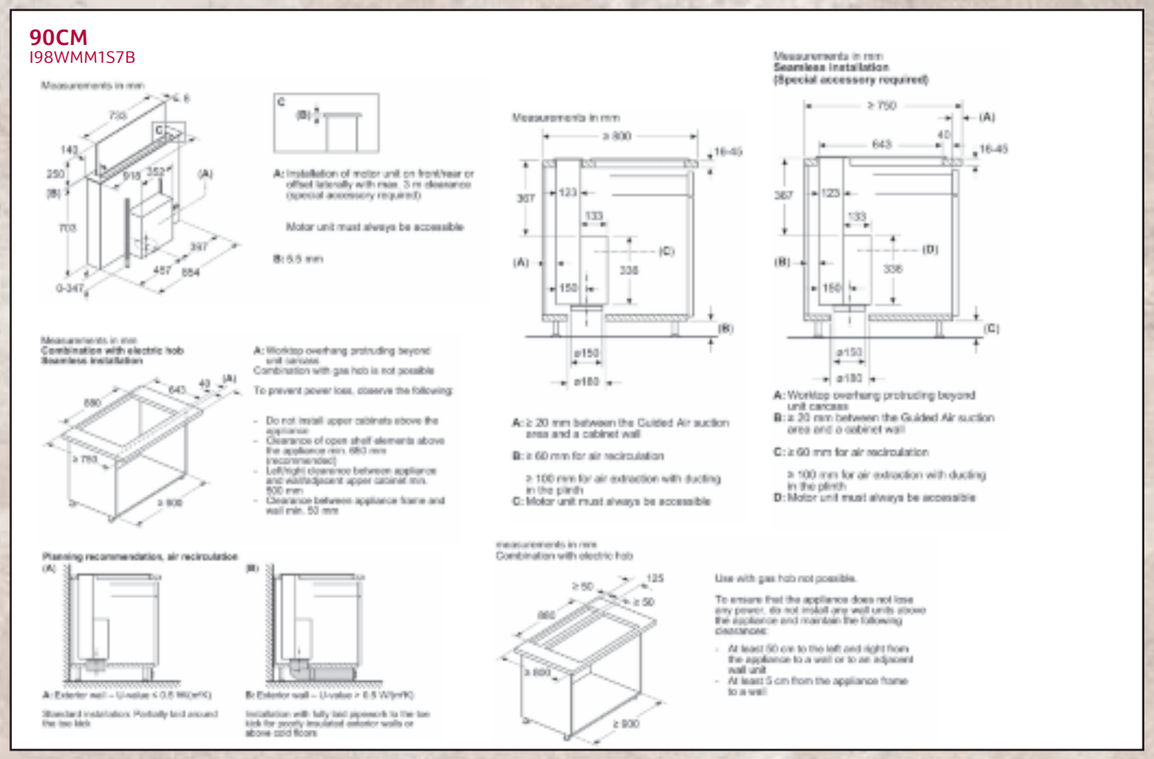

80CM
I88WMM1S7B

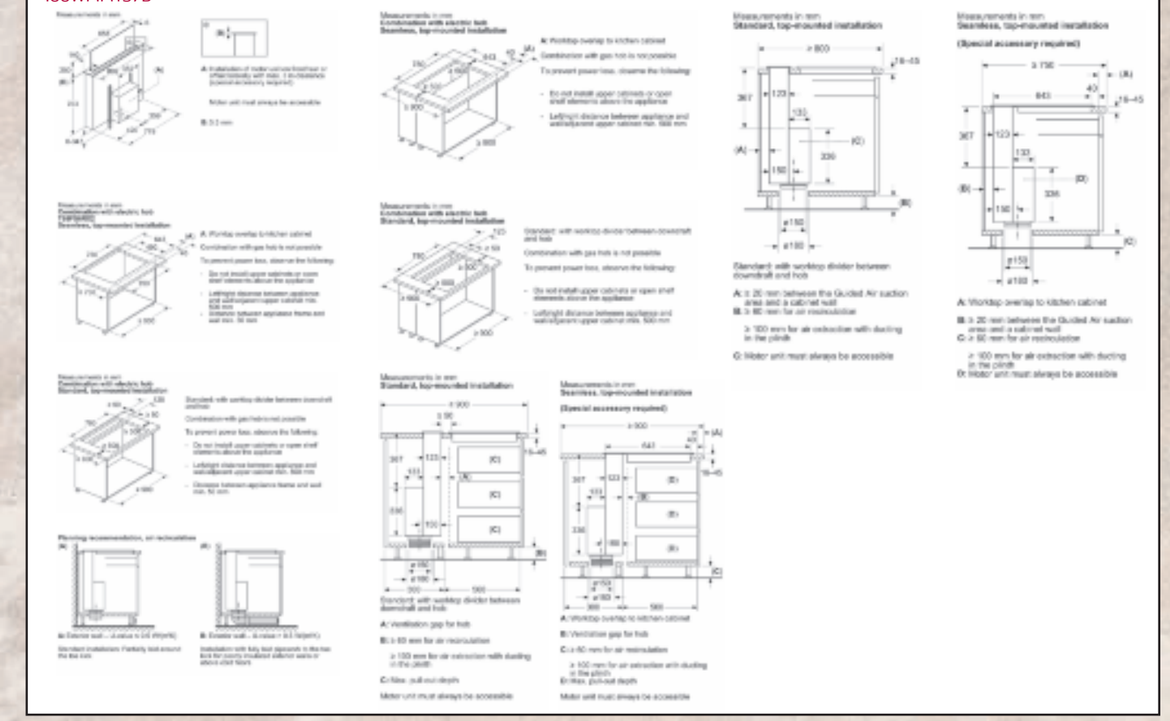

Ceiling Installation Hood

90CM
I95CAQ6N0B

The fan outlet can be turned in all four directions

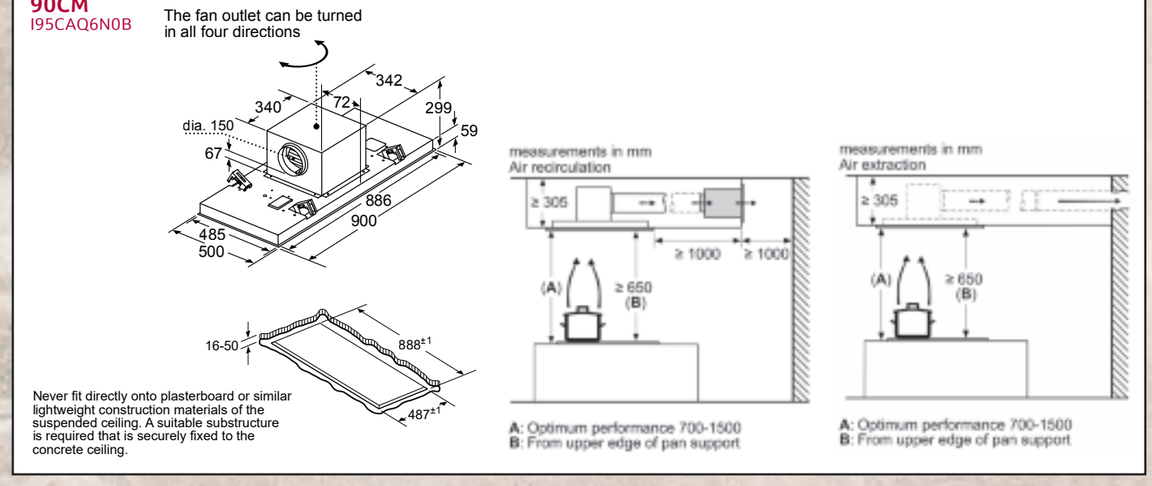

Never fit directly onto plasterboard or similar lightweight construction materials of the suspended ceiling. A suitable substructure is required that is securely fixed to the concrete ceiling.

Measurements in mm. The line drawings featured in this brochure are provided as a guide to general dimensions only and are subject to amendment without prior notice.
For full dimensional and installation details please refer to the documentation supplied with the appliance.

Wall Installation Hoods

90CM
D98IPT2S0B

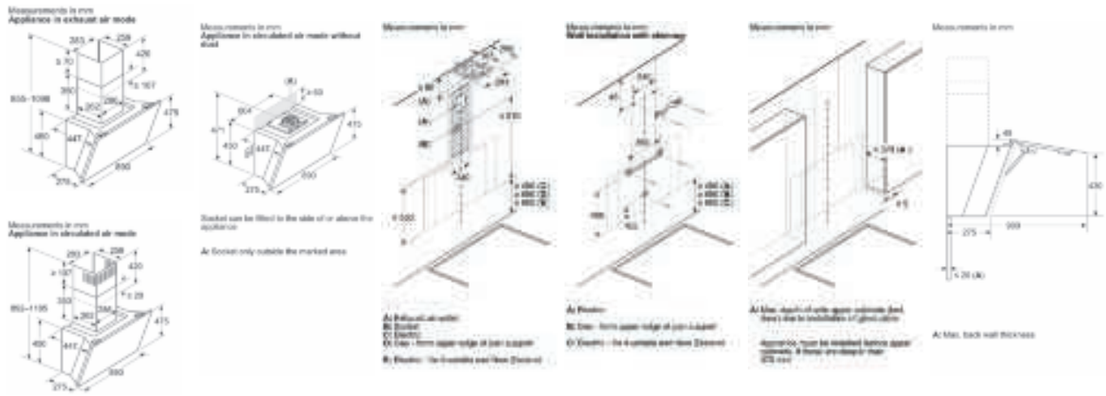

80CM
D88IAN2S0B

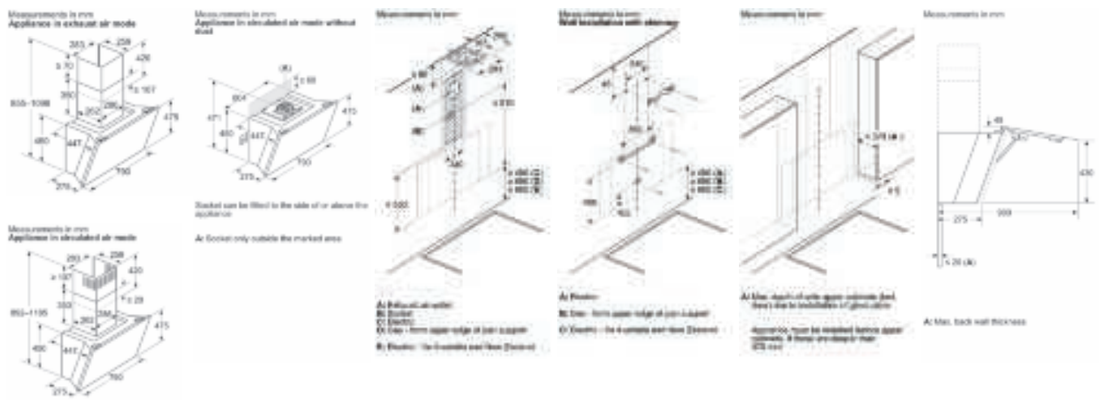

80CM
D85IFN1S0B

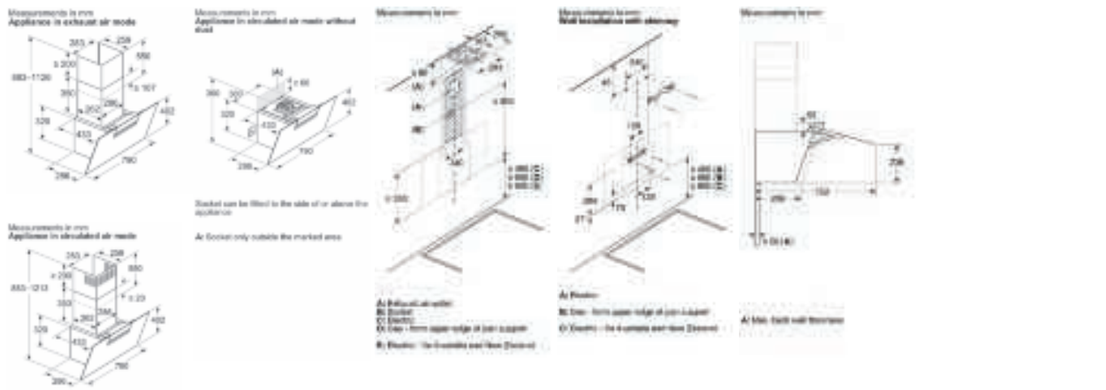

80CM
D83IDK1S0B

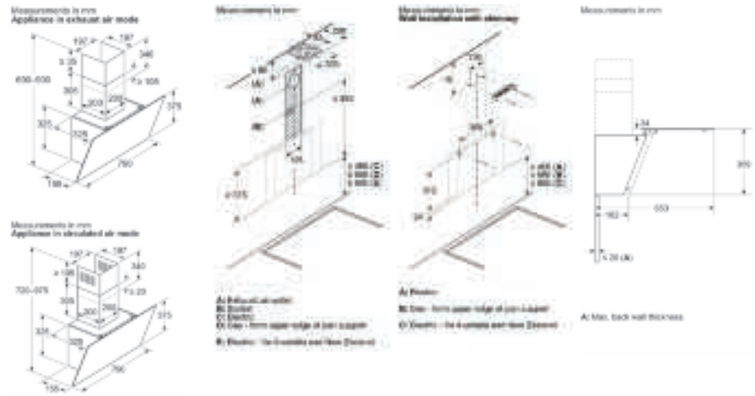

60CM
D65IFN1S0B

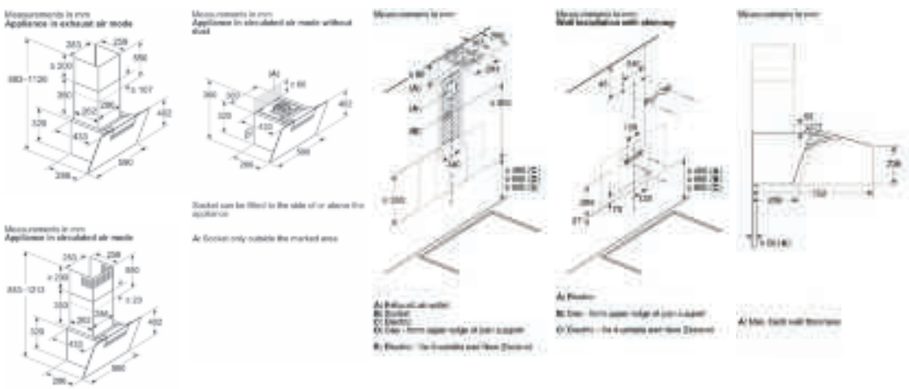

60CM
D63IDK1S0B

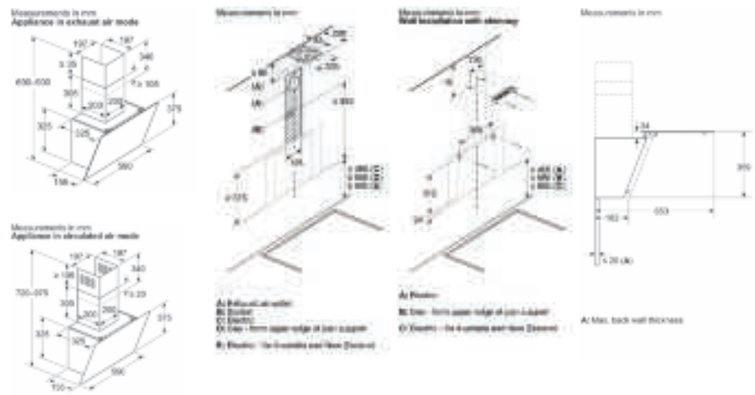

Measurements in mm. The line drawings featured in this brochure are provided as a guide to general dimensions only and are subject to amendment without prior notice.
For full dimensional and installation details please refer to the documentation supplied with the appliance.

Box Chimney Hoods

90CM
D92BBC0S0B

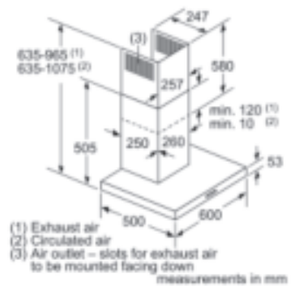

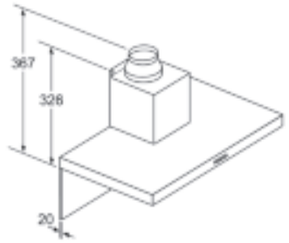

f a back panel is used,
he design of the appliance
nust be considered.

measurements in mm

90CM
D94BHM1S5B

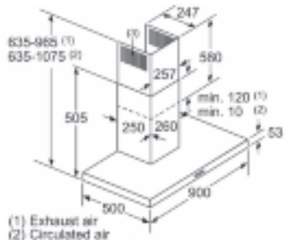

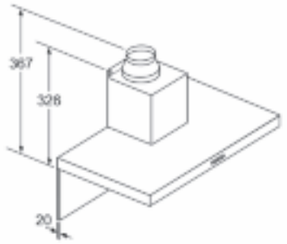

f a back panel is used,
he design of the appliance
nust be considered.

measurements in mm

90CM
D95BMP5N0B

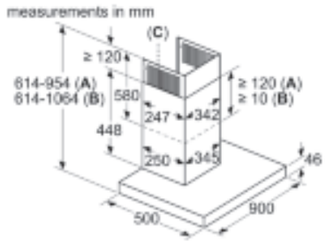

A: Air extraction
B: Air recirculation
C: Air outlet – slots for exhaust air
to be mounted facing down

90CM
D94BHM1N0B

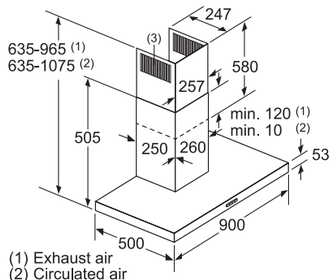

(1) Exhaust air
(2) Circulated air
(3) Air outlet – slots for exhaust air
to be mounted facing down

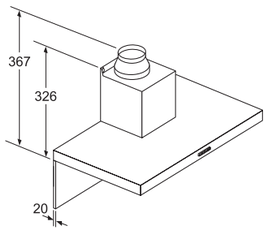

If a back panel is used,
the design of the appliance
must be considered.

60CM
D65BMP5N0B

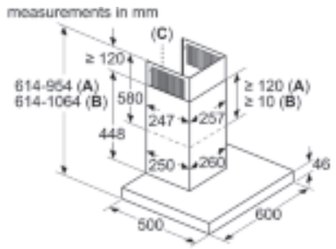

A: Air extraction
B: Air recirculation
C: Air outlet – slots for exhaust air

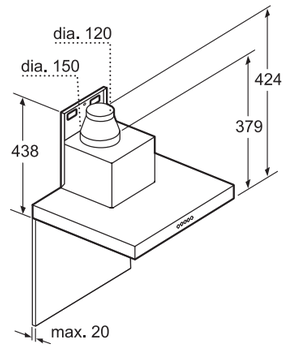

60CM
D62BBC0S0B

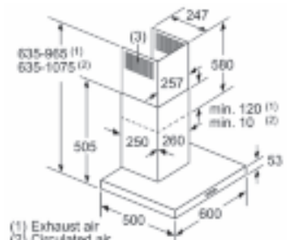

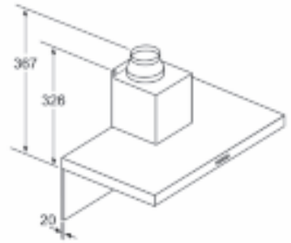

If a back panel is used,
the design of the appliance
must be considered.

measurements in mm

60CM
D64BHM1N0B, D62BBC0N0B

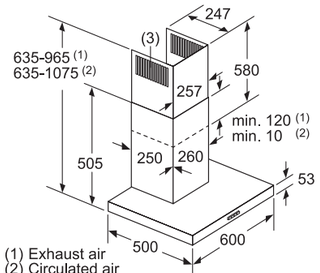

(1) Exhaust air
(2) Circulated air
(3) Air outlet – slots for exhaust air
to be mounted facing down

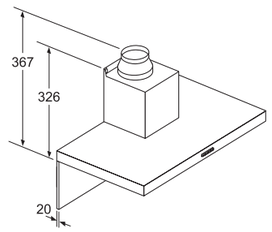

If a back panel is used,
the design of the appliance
must be considered.

Measurements in mm. The line drawings featured in this brochure are provided as a guide to general dimensions only and are subject to amendment without prior notice.
For full dimensional and installation details please refer to the documentation supplied with the appliance.

Pyramid Chimney Hoods

90CM
D94QFM1N0B

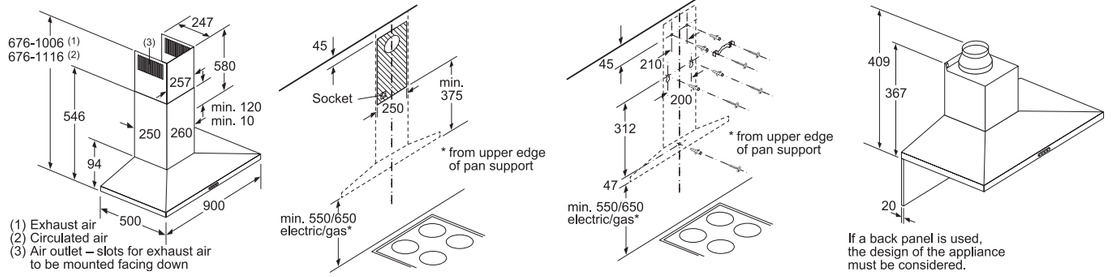

60CM
D64QFM1N0B

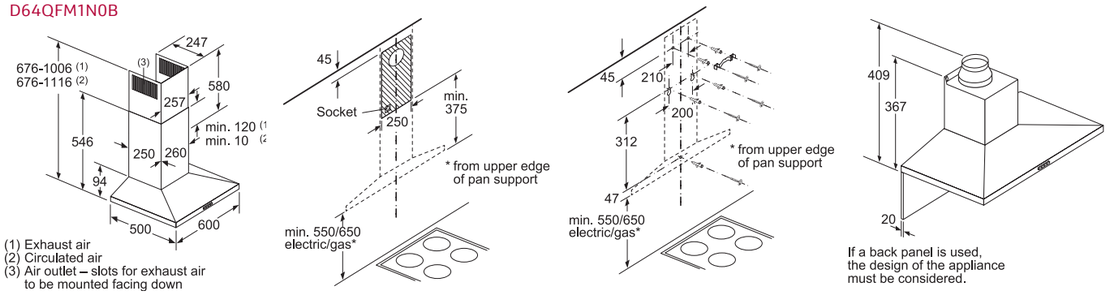

90CM
D92PBC0N0B

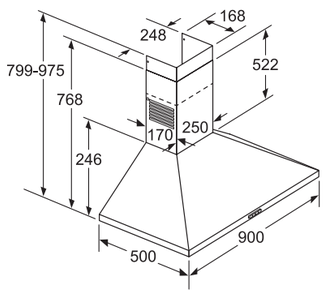

75CM
D72PBC0N0B

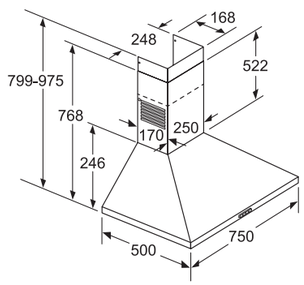

60CM
D62PBC0N0B

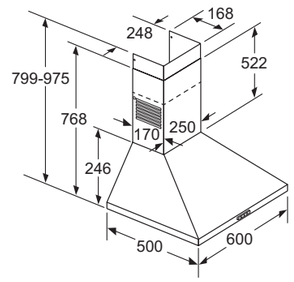

90CM
D92PBC0N0B

75CM
D72PBC0N0B

60CM
D62PBC0N0B

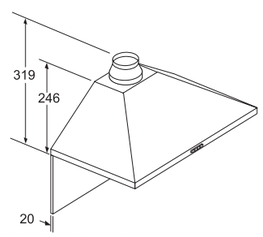

If a back panel is used, the design of the appliance must be considered.

Telescopic Hoods

90CM
D49ED22N1B

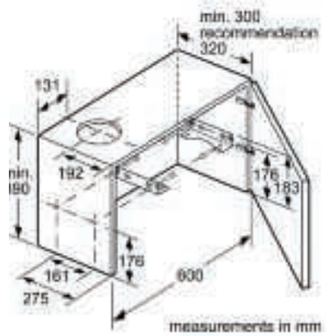

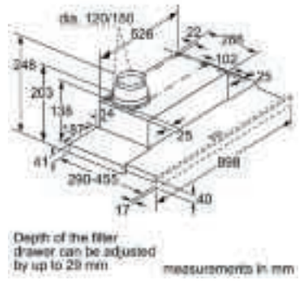

60CM
D46ED22N1B

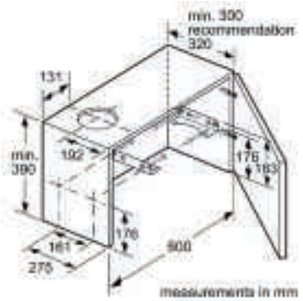

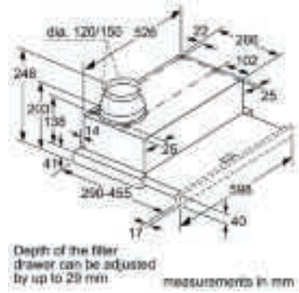

60CM
D46BR22N1B

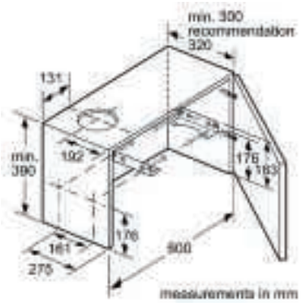

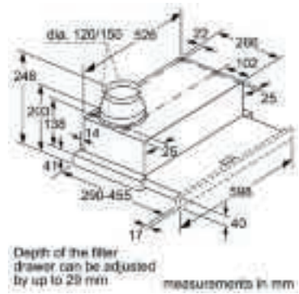

Measurements in mm. The line drawings featured in this brochure are provided as a guide to general dimensions only and are subject to amendment without prior notice.
For full dimensional and installation details please refer to the documentation supplied with the appliance.

Canopy Hoods

70CM
D57ML67N1B, D57MH56N0B

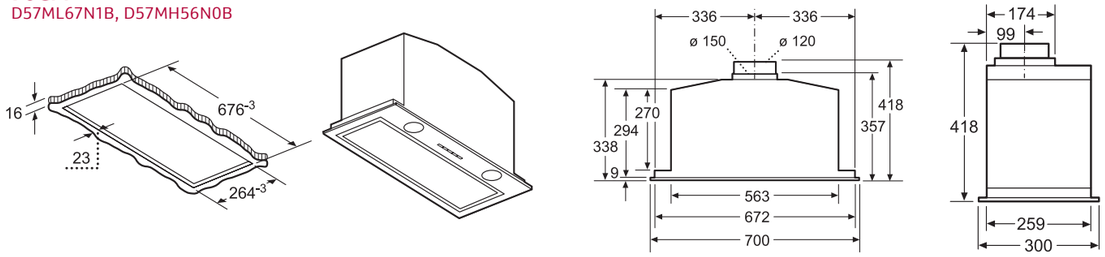

52CM
D55MH56N0B

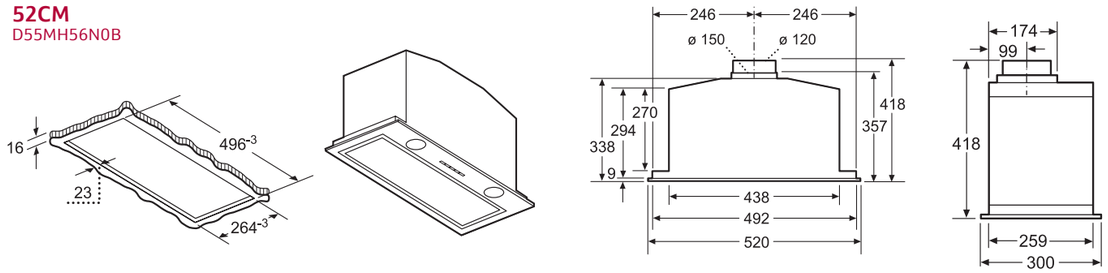

73CM
D5855X1GB

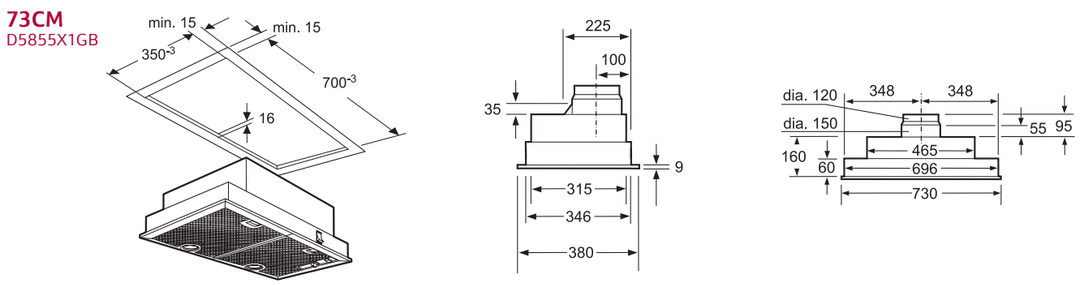

53CM
D5655X1GB

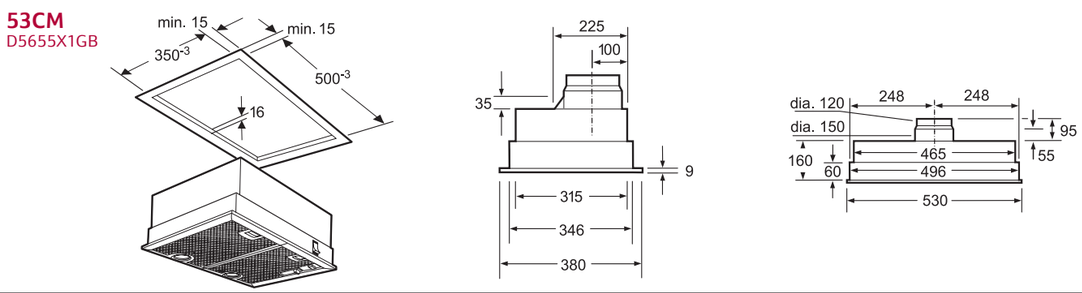

53CM
D51NAA1C0B

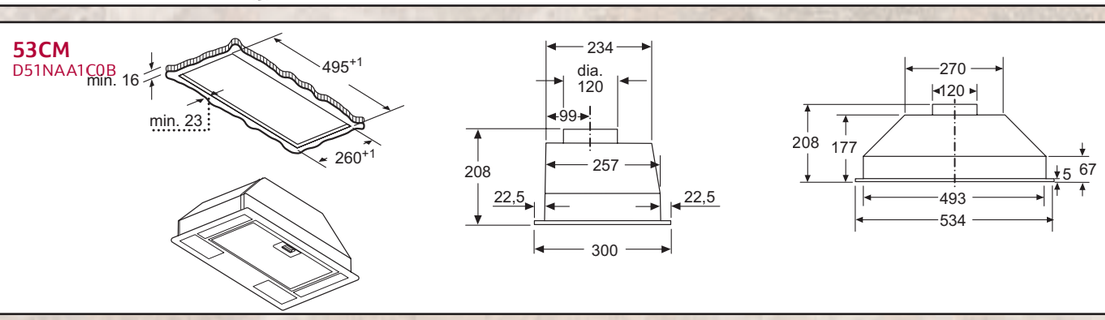

Integrated Hoods

60CM
D64MAC1X0B, D61MAC1X0B

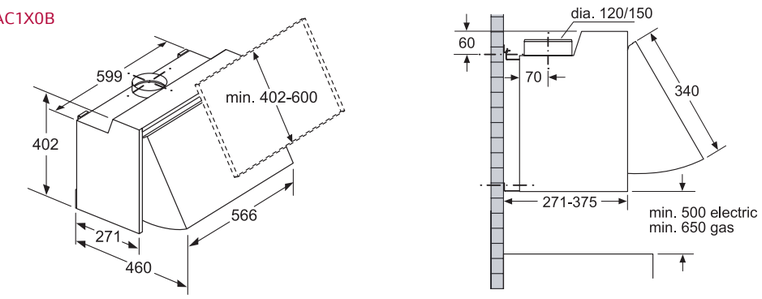

Integrated Design Hoods

90CM
D95XAM2S0B

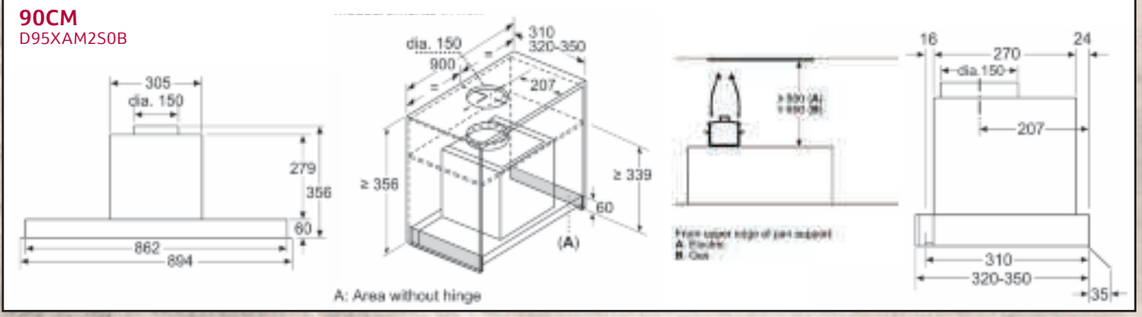

60CM
D65XAM2S0B

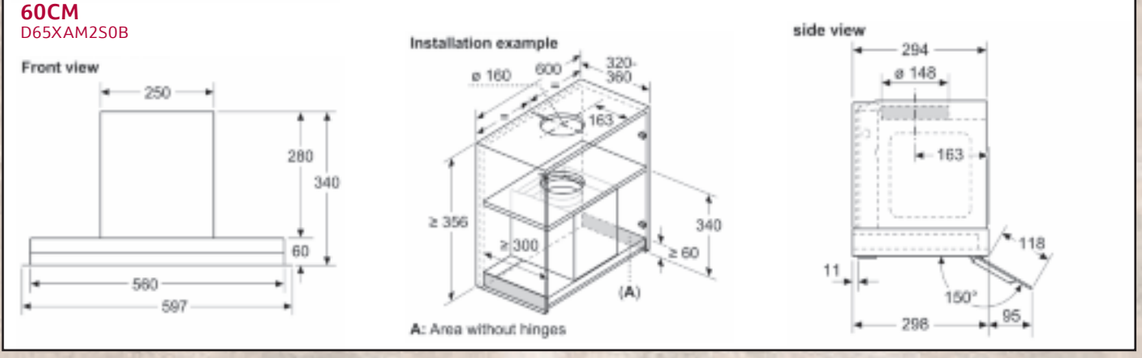

Measurements in mm. The line drawings featured in this brochure are provided as a guide to general dimensions only and are subject to amendment without prior notice.
For full dimensional and installation details please refer to the documentation supplied with the appliance.

NEFF COOLING *Range*

Let's keep it fresh

Fridges and freezers for food lovers.

- Fridges and Freezers are essential for any home chef and finding the perfect Cooling solution is easy with the NEFF Cooling Range.
- The range is comprehensive in both the features and the installation.
- NEFF's range of cooling appliances focus on Built In integrated models with a range of Fridge/Freezers in a variety of sizes and splits and a Range of Single Fridges and Freezers. This means that a customer can choose just how much fridge and freezer space and the range of hinges allows scope to include in the kitchen design – neatly integrated as part of the overall kitchen.
- The NEFF range is packed with features to really care for ingredients with the customer configuration in mind. With many key cooling features and flexibility, a customer can build exactly what they want.
- The range is clearly laid out in height order leading with Fridge/Freezers followed by the single appliance range.
- And for those that want the extra capacity the newest additions to the range to cope with the largest demands are the XL & XXL – designed to accommodate the largest shop.
- Peace of mind built-in – many of NEFF's cooling range are covered by our **5 year** warranty – clearly marked in the matrix tables. Further warranty information can be found on NEFF Customer Service pages 184-185.

Built-In Fridge Freezer Guide

Fridge Freezers

Comprehensive Range of models to suit customer needs.

- Available in two heights
  - Standard 177cm in various “splits” 70/30, 60/40, 50/50 of Fridge to Freezer.
  - The New 193.5cm tall XL & XXL range – available in a 60/40 split of Fridge to Freezer.
- Available in Fixed & Sliding hinge to accommodate design and kitchen furniture.
- All Fridge Freezers have a 4-star rating.

Hinge Types

Hinges to suit all kitchen designs

Our doors can be right-hinged or left-hinged in order to suit your kitchen design.

Fixed Hinge & Soft Close Hinge

The benefit of this type of hinge is that it carries more weight – ideal for kitchen cabinetry made from heavier hard wood. This hinge also allows the door to open at a wider angle, making the fridge cavity easily accessible. All NEFF doors close automatically when at an angle of approximately 15-20° and selected models have the benefit of Soft Close.

Sliding Hinge

Our sliding hinge feature sits between the appliance and the furniture door and is secured by a series of brackets. As you open the furniture door, the appliance door is also opened via the sliding bracket design.

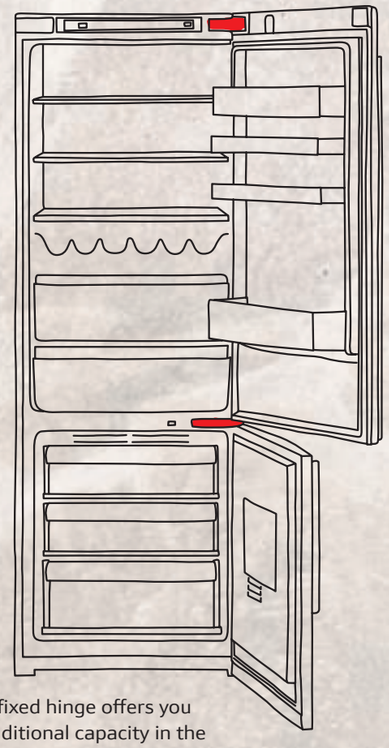

A fixed hinge offers you additional capacity in the refrigerator, leaving you more room for your food.

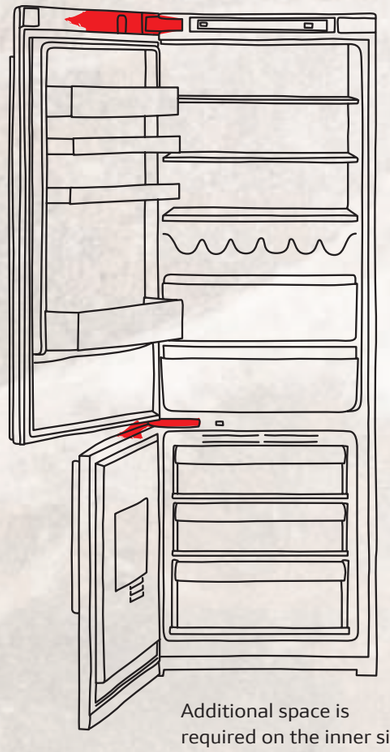

Additional space is required on the inner side of the cabinet to make way for the door hinge.

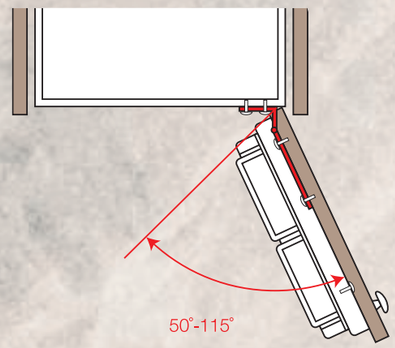

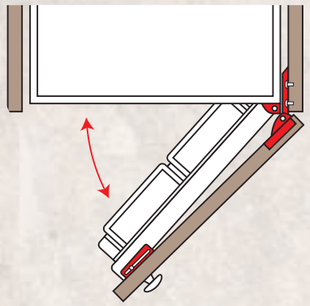

Built-In Single Fridge & Freezer Guide

Single Fridges & Single Freezers

For customers looking to install a single fridge and freezer this range will suit their needs.

- Available in several heights to create a bespoke cooling solution.
- Extensive installation combinations – Side by Side, Over & Under & Built Under options available.
- All appliances have a 4-star rating.

Size Guide & Installation Options

Combination and layout solutions for installing your cooling appliances

With so many kitchen styles to choose from, at NEFF we've catered for all spaces and lifestyles. With the option to build a cooling solution to your requirements, our installation options are designed to offer the ultimate flexibility. From side-by-side fridge and freezer installations to over-under stacked installations, it's easy to incorporate NEFF appliances into your overall kitchen design.

Installation Solutions

- The range can be installed Over/Under to create a bespoke solution.
- Depending on fridge and freezer capacity required the range can be installed to create the solution.
- The range can be installed Side by Side and the Tall Fridge & Freezer create equal fridge and freezer capacity.

Over/Under installation options

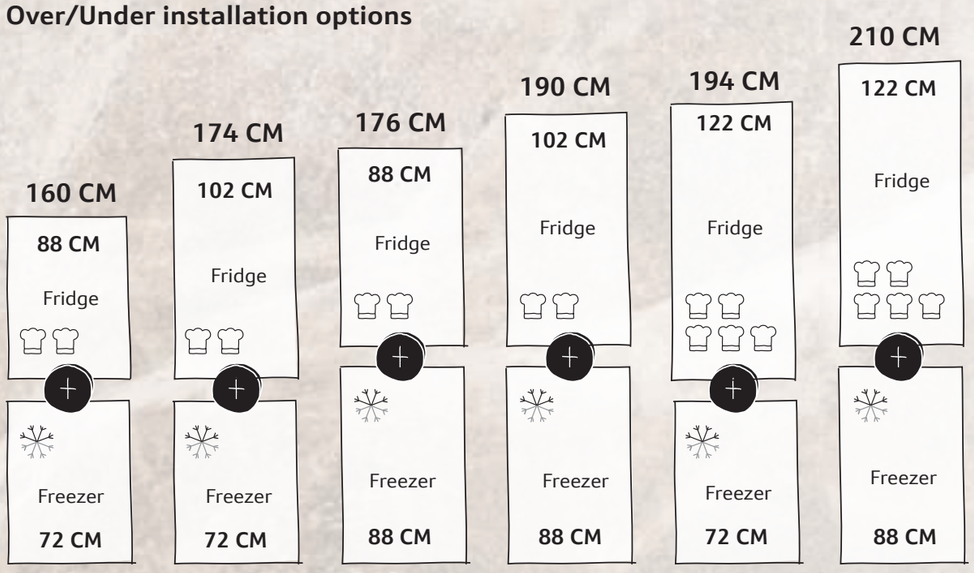

Side by Side installation options

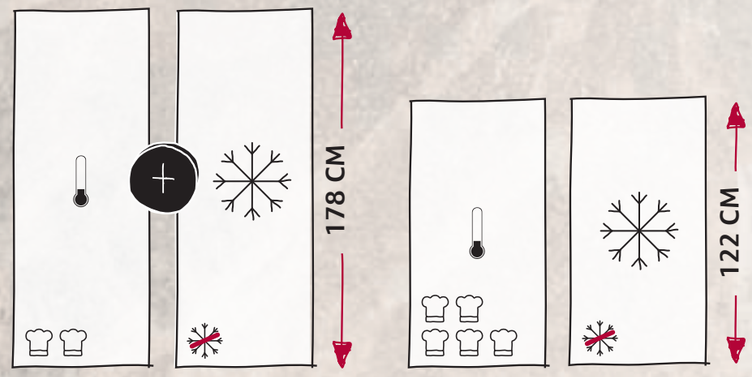

Other Styles

American-Style Fridge Freezer

- Side by Side configuration with Anti-fingerprint stainless-steel doors.
- No Frost – No more defrosting your freezer.
- Ice Dispenser – Ice cubes and crushed ice are at your fingertips when plumbed in.
- Fresh Safe – Fridge drawer for flexible storage of your fresh fruit and vegetables

Built Under Solutions

Wine Cabinets

- Available in two widths; 30cm – 21 bottle capacity /60cm – 44 bottle capacity
- 2 in 1 Temperature Zone (5°C-20°C)
- Individual temperature zones to store white and red wine.
- Interior Light

Built Under Fridges & Freezers

- 82cm High to install under a worktop
- Super cooling with Home Connect app
- Some models with 4 star freezer section
- LED lighting

Your guide to Cooling

SERIES FUNCTIONS				
Product Function	N 90	N 70	N 50	N 30
Home Connect	●	-	●	●
Fresh Safe	Fresh Safe 3	Fresh Safe 2	Fresh Safe	Fresh Safe
No Frost/Low Frost	●/-	●/●	●/●	●/
Vario Shelf	●	●	-	-
Wire Flex Shelf	●	-	-	-
Easy Access Shelf	●	●	-	-
Easy Lift Shelf	●	-	-	-
Flexi Rail Drawers	●	-	-	-
LED Display	●	●	●	-
Electronic Control	-	-	●	-
Energy Rating	E or F	E or F	E or F	F
Super Cool	●	●	●	-
Fresh Sense	●	●	-	-
Soft Close/Fixed/Sliding	●/●/-	-/●/-	●/●/-	-/-/●
LED Light/Daylight/Interior Light	●/-/-	●/-/-	●/●/-	-/-/●
Super Freeze	●	●	●	-
Big Box	●	●	●	-
Wine Cabinets	-	●	-	-
Vegetable Drawer	-	-	-	●
Manual Defrost	-	-	-	●

Cooling Functions

MULTIPLE COOLING SYSTEMS
Separate cooling circuits for independent temperature control, to prevent the transference of odours and/or humidity between the fridge and freezer cavities.

NO FROST
No Frost freezers automatically react to any signs of frost so it never has a chance to build up. With a No Frost freezer air is blown from the back wall and circulates over food items. As a result, there is no condensation or build up of frost and food does not freeze together.

SUPER FREEZE
Go ahead and lower the temperature in your freezer to prevent your already frozen goods from warming up just by being in the same drawer. Super Freeze lowers the temperature temporarily before switching back automatically. Simply activate “Super Freeze”.

INTELLIGENT COOLING
Uses a range of innovative sensors to calculate the quantity of food in the fridge with the outside temperature. The fridge then adjusts the internal cooling power accordingly.

DOOR OPEN
Door Open and high temperature alarm systems alert you if the door has been left open or a power cut has occurred. Ideal for mitigating food wastage.

DOOR OPEN ASSIST
Open your fridge with a simple push or a single word. The push to open mechanism is a perfect match with handle free kitchen furniture

MULTI AIR FLOW COOLING
Greatly improves the circulation of air around the fridge, regulating the temperature and humidity levels and eradicating condensation build up, so that your food stays fresher for longer.

LOW FROST
Low Frost improves performance and reduces frost build up in an energy efficient way. It also provides more storage space due to there being no internal evaporator and you may only need to defrost your freezer every 2-3 years.

ECO AIR FLOW
Our Eco Air Flow system treats your ingredients as lovingly as you picked them. Eco Air Flow circulates the air evenly in your fridge to keep flavours delicious under ideal cooling conditions.

SUPER COOL
Allows for the increase in temperature that occurs when fresh food is added. As soon as the food is cold, the fridge will readjust to the normal temperature.

FRESH SAFE
Our Innovative 0°C Fresh safe preservation system extends the life of food times to reduce waste.

Design Features

Unique to NEFF, making your life even easier

EASY CLEAN MAGNETIC DOOR SEALS
The magnetic door seals on all of our refrigeration ranges are removable, making them easy to clean and/or replace if necessary.

SOFT CLOSE
With Soft Close, the fridge door closes automatically when open at an angle of 20° or less. With a soft closing mechanism, it's the ideal addition to kitchens with soft close cabinets.

ANTI-SPILL TRIMS
Effectively hold up to a pint of liquid in case of accidental spillage. Food is protected below and the clean-up process is a little less messy.

WIRE SHELF
Completely unique to NEFF, our new Wire Shelf feature is ideal for securely storing jars and bottles stacked on their side.

EASY LIFT SHELF
With Easy Lift shelving, it's possible to adjust shelves with just one hand – even when they're fully loaded. Perfect when unloading shopping or introducing freshly prepared dishes to the fridge.

EASY LIFT DOOR STORAGE
Easily adjust door storage with just one hand. Combined with Easy Lift Shelves, your fridge space won't restrict your favourite foods and drink.

EASY ACCESS SHELF
The retractable glass shelf allows for easy loading and unloading as well as better access to your food. Ideal for putting the finishing touches to those delicate desserts.

BOTTLE RACK
Always have a chilled bottle on standby for those impromptu get-togethers.

VARIO SHELF
Designed to offer complete flexibility in your fridge, sectioned glass shelves can simply be separated and slid underneath when not in use. Ideal for larger dishes, with space left over for a convenient condiments storage area at the back.

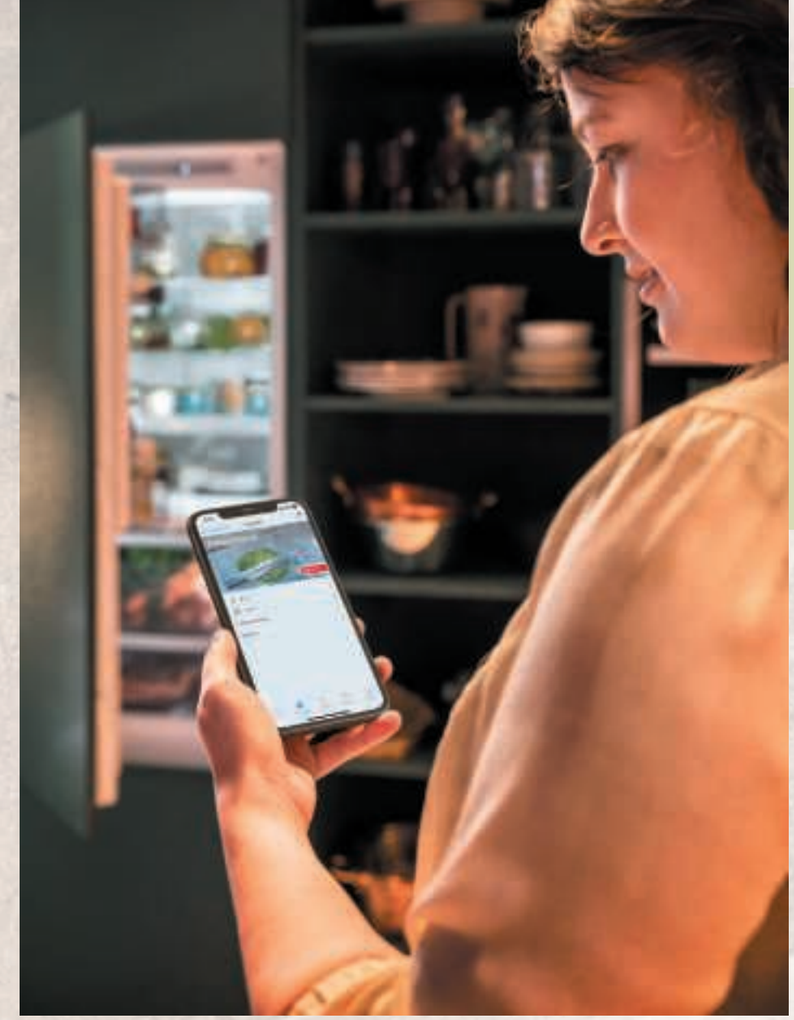

Home Connect

Home Connect
Simply use your phone or tablet to control your XXL fridge, even when you're on the go. Use your Home Connect app to get smart benefits from your fridge. Control your fridge on the go and easily set it to ECO or Holiday Mode, even after you've left home. Simply smart.

Individual Temperature Control
Tastes vary - and so do the ingredients. Individual Temperature Control enables you to set a higher temperature when no fresh greens, reds or yellows are sitting on their chilled shelves. Simply choose an eco-friendly mode with a higher temperature for your fridge via the electronic control panel, while the Individual Temperature Control keeps the freezer up and running.

Door Alarm
Say goodbye to the frustration of accidentally leaving the fridge door open. Equipped with both visual and acoustic alarms, the fridge signals that it needs another gentle shove for sustainable cooling. Even if the door is slightly ajar, the fridge will request a gentle nudge to maintain optimal temperatures. And for added convenience, if your fridge is integrated with the Home Connect app, you'll receive notifications directly to your smartphone.

Freezer Light
Just find what you are looking for: Our Freezer LED light illuminates every frozen ingredient in your drawers. And if your appliance is Home Connect enabled, you may additionally adapt the light intensity to your liking. Also, you may activate the emotional light which adds a lovely light effect to your kitchen even when the doors of your fridge and freezer are closed.

Fresh Safe 1 <0°C>
Enjoy a variety of storage options to suit your preferences, including a flexible drawer for fruits and veggies.
In addition, the unit features a dedicated compartment for meat and fish that's kept at an optimal temperature up to 0°C.

Built Under Wine Cabinets

	30CM	60CM
	KU9202HF0G | N70	**KU9213HG0G | N70**
	• Holds 21 Wine Bottles • LED Lighting • 1 Temperature Zone • Temp Range 5° - 20°C • UV Filtered glass door	• Holds 44 Wine Bottles • LED Lighting • 2 Temperature Zones • Temp Range 5° - 20°C • UV Filtered glass door
DESIGN FEATURES		
Colour of door panels	Black	Black
Colour of side panels	Black	Black
Type of glass door	3 glass panels, UV-filtered	3 glass panels, UV-filtered
Door handle type	Vertical bar handle	Vertical bar handle
Temperature display	Interior / Digital LED	Interior / Digital LED
Reversible door, hinged on right	●	●
Home connect / Built in cameras		
KEY FEATURES – WINE CABINET SECTION		
Range of temperature (0°C)	5 - 20	5 - 20
Temperature zones	1	2
LED light	LED	LED
Number of shelves	4	5
Number of bamboo shelves	3	3
Number of adjustable shelves		
LED lighting with soft start & presenter lighting	●	●
Capacity in 0.75l (Bordeaux bottles)	21	44
FUNCTIONS		
Door open warning signal/malfunction	●	●
Child lock	●	●
PERFORMANCE & CONSUMPTION		
Energy efficiency class	F	G
Energy consumption[1] kWh/annum	100	130
Refrigerator net capacity L	56 l	108 l
Climate Class[2]	SN-ST	SN-ST
Noise level dB (A) re 1 pW	38	38
Noise level class	C	C
Height of product mm	818	818
Width of product mm	298	598
Depth of product mm	567	581

Please ensure adequate ventilation is provided in plinth to allow air flow.

[1] Actual energy consumption will depend on how the appliance is used and where it is located.
[2] Climate zone ST = designed to operate in ambient temperature of +16°C to 38°C.
Climate zone SN = designed to operate in ambient temperature of +10°C to 32°C.

Freestanding American-Style Fridge Freezer

	178CM TALL
	KA3923IE0G | N70
	• Stainless Steel anti fingerprint • Automatic Ice & Water (Plumbed In) • 2 Fresh Safe Drawers (Fridge) • No Frost
DESIGN FEATURES	
Colour of door panels	Stainless steel anti fingerprint
Colour of sides	Grey
Style of handle	vertical bar handle
Colour of handle	Stainless steel
NoFrost in fridge and freezer	●
Home Connect, Wi-Fi dongle included	
FOOD FRESHNESS SYSTEM	
Fresh Safe	2 x Fresh Safe drawers on rails
KEY FEATURES – FRIDGE SECTION	
Product highlights	LED
Super Cool	●
Type of control	Electronic
Number of shelves	5
Number of adjustable shelves	
Bottle shelves in fridge	●
Number of door bins / shelves	5
Temperature display	Digital
Warning signal door open	●
KEY FEATURES – FREEZER SECTION	
Door opened indicator	●
Super Freeze function	●
Temperature adjustable in freezer	●
Number of ice cube trays	Automatic ice cube maker
Ice dispenser features	Crushed ice, ice cubes, water, water filter
Number of freezer drawers	2
ADDITIONAL INFORMATION	
Energy efficiency class	E
Energy consumption[1] kWh/annum	323
Total net capacity L	562
Refrigerator net capacity L	371
Freezer net capacity L	191
Climate Class[2]	SN-T
Noise level dB (A) re 1 pW	42
Noise level class	D
Additional accessories included	1 x connection hose, 1 x egg tray
Height of product mm	1787
Width of product mm	908
Depth of product mm	707

[1] Actual energy consumption will depend on how the appliance is used and where it is located.
[2] Climate zone SN = designed to operate in ambient temperature of +10°C to 32°C.
Climate zone T = designed to operate in ambient temperature of +18°C to 43°C.

Built-In Fridge Freezers

	XXL 193.5CM TALL - 60/40		XL 193.5CM TALL - 60/40	
	KB7966DD0 | N70	**KB7962SE0 | N50**	**KI7962FD0 | N50**	**KI7961SE0 | N30**
	• Extra Capacity • 2 Fresh Safe Drawers • No Frost • Home Connect • LED Lighting • Fixed Hinge	• Extra Capacity • 2 Fresh Safe Drawer • No Frost • Home Connect • LED Lighting • Sliding Hinge	• Extra Capacity • 2 Fresh Safe Drawers • No Frost • LED Lighting • Fixed Hinge	• Extra Capacity • 1 Fresh Safe Drawer • No Frost • LED Lighting • Sliding Hinge
DESIGN FEATURES				
Fridge / Freezer split	60/40	60/40	60/40	60/40
No Frost	●	●	●	●
Low Frost or Manual defrost				
Soft Close hinge				
Type of hinge (reversible)	Fixed hinge	Sliding hinge	Fixed hinge	Sliding hinge
Home Connect	●	●		
FOOD FRESHNESS SYSTEM				
Fresh Safe	2 x Fresh Safe drawers	2 x Fresh Safe drawer	2 x Fresh Safe drawers	1 x Fresh Safe drawer
KEY FEATURES – FRIDGE SECTION				
Light	LED	LED	LED	LED
Super Cool function	●	●		●
Type of control	Electronic	Electronic	Electronic	Electronic
Number of shelves	5	5	3	4
Number of adjustable shelves	4	4	3	4
Number of door bins / shelves	7	7	4	4
Type of shelves	Safety glass	Safety glass	Safety glass	Safety glass
Temperature display	Digital LED	Digital LED	Digital LED	Digital LED
Warning signal door open	●	●	●	●
Bottle shelves in fridge	●	●	●	
KEY FEATURES – FREEZER SECTION				
Super Freeze function	●	●	●	●
Temperature adjustable in freezer	●	●		●
Number of ice cube trays	1	1	1	1
Number of freezer drawers	3	3	3	3
ADDITIONAL INFORMATION				
Energy efficiency class	D	E	D	E
Energy consumption[1] kWh/annum	204	256	184	231
Total net capacity L	381	383	290	290
Refrigerator net capacity L	283	285	215	215
Freezer net capacity L	98	98	75	75
Climate class[2]	SN-ST	SN-ST	SN-ST	SN-ST
Noise level dB (A) re 1 pW	33	34	34	34
Noise level class	B	B	B	B
Additional accessories included	3 x egg tray, 1 x ice cube tray, 1 x bottle holder/wire rack	3 x egg tray, 1 x ice cube tray, 1 x bottle holder/wire rack	2 x egg tray, 1 x ice cube tray, 1 x bottle holder/wire rack	3 x egg tray, 1 x ice cube tray
Height of product mm	1935	1935	1935	1935
Width of product mm	708	691	558	541
Depth of product mm	548	548	548	548

[1] Actual energy consumption will depend on how the appliance is used and where it is located.
[2] Climate zone SN = designed to operate in ambient temperature of +10°C to 32°C.
Climate zone T = designed to operate in ambient temperature of +18°C to 43°C.

Built-In Fridge Freezers

	177CM TALL - 70/30			
	KI6873FE0G | N70	KI5872FE0G | N50	KI5872SE0G | N50	KI5871SE0G | N30
	• 1 Fresh Safe 2 Drawer • Low Frost • Fixed Hinge	• 1 Fresh Safe Drawer • Low Frost • Fixed Hinge	• 1 Fresh Safe Drawer • Low Frost • Sliding Hinge	• 1 Fresh Safe Drawer • Low Frost • Sliding Hinge
DESIGN FEATURES				
Fridge / Freezer split	70/30	70/30	70/30	70/30
No Frost				
Low Frost or Manual defrost	Low Frost	Low Frost	Low Frost	Low Frost
Soft Close hinge				
Type of hinge (reversible)	Fixed hinge	Fixed hinge	Sliding hinge	Sliding hinge
Home Connect				
FOOD FRESHNESS SYSTEM				
Fresh Safe	1 x Fresh Safe 2 drawer	1 x Fresh Safe drawer	1 x Fresh Safe drawer	1 x Fresh Safe drawer
KEY FEATURES – FRIDGE SECTION				
Light	LED	LED	LED	LED
Super Cool function	●			●
Type of control	Electronic	Electronic	Electronic	Electronic
Number of shelves	5	5	5	5
Number of adjustable shelves	4	4	4	5
Number of door bins / shelves	5	4	4	4
Type of shelves	Safety glass	Safety glass	Safety glass	Safety glass
Temperature display	Digital LED	Digital LED	Digital LED	Digital LED
Warning signal door open	●	●	●	●
Bottle shelves in fridge	●			
KEY FEATURES – FREEZER SECTION				
Super Freeze function	●	●	●	●
Temperature adjustable in freezer	●			
Number of ice cube trays	1	1	1	1
Number of freezer drawers	2	2	2	2
ADDITIONAL INFORMATION				
Energy efficiency class	E	E	E	E
Energy consumption[1] kWh/annum	207	216	216	216
Total net capacity L	272	270	270	270
Refrigerator net capacity L	209	200	200	200
Freezer net capacity L	63	70	70	70
Climate class[2]	SN-T	SN-ST	SN-ST	SN-ST
Noise level dB(A) re 1 pW	36	35	35	35
Noise level class	C	B	B	B
Additional accessories included	2 x egg tray, 1 x ice cube tray, 1 x bottle holder in door tray	2 x egg tray, 1 x ice cube tray	2 x egg tray, 1 x ice cube tray	3 x egg tray, 1 x ice cube tray
Height of product mm	1772	1772	1772	1772
Width of product mm	558	541	541	541
Depth of product mm	545	545	545	548

	177CM TALL - 60/40	
	KI7863DD0G | N70	KI6863FE0G | N70
	• 2 Fresh Safe Drawers • No Frost • Fixed Hinge / Soft Close Hinge	1 Fresh Safe 2 Drawer • Low Frost • Fixed Hinge
DESIGN FEATURES		
Fridge / Freezer split	60/40	60/40
No Frost	●	
Low Frost or Manual defrost		Low Frost
Soft Close hinge	●	
Type of hinge (reversible)	Fixed hinge	Fixed hinge
Home Connect		
FOOD FRESHNESS SYSTEM		
Fresh Safe	2 x Fresh Safe drawers	1 x Fresh Safe 2 drawer
KEY FEATURES – FRIDGE SECTION		
Light	LED	LED
Super Cool function	●	●
Type of control	Electronic	Electronic
Number of shelves	3	4
Number of adjustable shelves	1	4
Number of door bins / shelves	4	5
Type of shelves	Safety glass	Safety glass
Temperature display	Digital LED	Digital LED
Warning signal door open	●	●
Bottle shelves in fridge	●	●
KEY FEATURES – FREEZER SECTION		
Super Freeze function	●	●
Temperature adjustable in freezer	●	●
Number of ice cube trays	1	1
Number of freezer drawers	3	3
ADDITIONAL INFORMATION		
Energy efficiency class	D	E
Energy consumption[1] kWh/annum	186	219
Total net capacity L	260	266
Refrigerator net capacity L	184	192
Freezer net capacity L	76	74
Climate class[2]	SN-ST	SN-ST
Noise level dB(A) re 1 pW	35	36
Noise level class	B	C
Additional accessories included	3 x egg tray, 1 x ice cube tray, 1 x bottle holder/wire rack	2 x egg tray, 1 x ice cube tray, 1 x bottle holder in door tray
Height of product mm	1772	1772
Width of product mm	558	558
Depth of product mm	548	545

[1] Actual energy consumption will depend on how the appliance is used and where it is located.
[2] Climate zone SN = designed to operate in ambient temperature of +10°C to 32°C.
Climate zone T = designed to operate in ambient temperature of +18°C to 43°C.

Built-In Fridge Freezers

	177CM TALL - 60/40		
	KI7862FE0G | N50	KI7862SE0G | N50	KI5862SE0G | N50
	• 2 Fresh Safe Drawers • No Frost • Fixed Hinge	• 2 Fresh Safe Drawers • No Frost • Sliding Hinge	• 1 Fresh Safe Drawer • Low Frost • Sliding Hinge
DESIGN FEATURES			
Fridge / Freezer split	60/40	60/40	60/40
No Frost	●	●	
Low Frost or Manual defrost			Low Frost
Soft Close hinge			
Type of hinge (reversible)	Fixed hinge	Sliding hinge	Sliding hinge
Home Connect			
FOOD FRESHNESS SYSTEM			
Fresh Safe	2 x Fresh Safe drawers	1 x Fresh Safe drawer	1 x Fresh Safe drawer
KEY FEATURES – FRIDGE SECTION			
Light	LED	LED	LED
Super Cool function			
Type of control	Electronic	Electronic	Electronic
Number of shelves	3	3	4
Number of adjustable shelves	3	3	3
Number of door bins / shelves	4	4	4
Type of shelves	Safety glass	Safety glass	Safety glass
Temperature display	Digital LED	Digital LED	Digital LED
Warning signal door open	●	●	●
Bottle shelves in fridge	●	●	
KEY FEATURES – FREEZER SECTION			
Super Freeze function	●	●	●
Temperature adjustable in freezer			
Number of ice cube trays	1	1	1
Number of freezer drawers	3	3	3
ADDITIONAL INFORMATION			
Energy efficiency class	E	E	E
Energy consumption[1] kWh/annum	234	234	229
Total net capacity L	260	260	269
Refrigerator net capacity L	184	184	184
Freezer net capacity L	76	76	85
Climate class[2]	SN-ST	SN-ST	SN-ST
Noise level dB(A) re 1 pW	35	35	35
Noise level class	B	B	B
Additional accessories included	2 x egg tray, 1 x ice cube tray, 1 x bottle holder/wire rack	3 x egg tray, 1 x ice cube tray 1 x bottle holder/wire rack	2 x egg tray, 1 x ice cube tray
Height of product mm	1772	1772	1772
Width of product mm	541	541	541
Depth of product mm	548	548	545

	177CM TALL - 60/40		177CM TALL - 50/50	
	KI7861FE0G | N30	KI7861SE0G | N30	KI7851FE0G | N30	KI7851SE0G | N30
	• 1 Fresh Safe Drawer • No Frost • Fixed Hinge	• 1 Fresh Safe Drawer • No Frost • Sliding Hinge	• 1 Fresh Safe Drawer • No Frost • Fixed Hinge	• 1 Fresh Safe Drawer • No Frost • Sliding Hinge
DESIGN FEATURES				
Fridge / Freezer split	60/40	60/40	50/50	50/50
No Frost	●	●	●	●
Low Frost or Manual defrost				
Soft Close hinge				
Type of hinge (reversible)	Fixed hinge	Sliding hinge	Fixed hinge	Sliding hinge
Home Connect				
FOOD FRESHNESS SYSTEM				
Fresh Safe	1 x Fresh Safe drawer	1 x Fresh Safe drawer	1 x Fresh Safe drawer	1 x Fresh Safe drawer
KEY FEATURES – FRIDGE SECTION				
Light	LED	LED	LED	LED
Super Cool function	●	●	●	●
Type of control	Electronic	Electronic	Electronic	Electronic
Number of shelves	4	4	3	3
Number of adjustable shelves	3	3	2	2
Number of door bins / shelves	3	3	2	2
Type of shelves	Safety glass	Safety glass	Safety glass	Safety glass
Temperature display	Digital LED	Digital LED	Digital LED	Digital LED
Warning signal door open	●	●	●	●
Bottle shelves in fridge				
KEY FEATURES – FREEZER SECTION				
Super Freeze function	●	●	●	●
Temperature adjustable in freezer				
Number of ice cube trays	1	1	1	1
Number of freezer drawers	3	3	4	4
ADDITIONAL INFORMATION				
Energy efficiency class	E	E	E	E
Energy consumption[1] kWh/annum	234	234	239	239
Total net capacity L	260	260	249	249
Refrigerator net capacity L	184	184	150	150
Freezer net capacity L	76	76	99	99
Climate class[2]	SN-ST	SN-ST	SN-ST	SN-ST
Noise level dB(A) re 1 pW	35	35	39	39
Noise level class	B	B	C	C
Additional accessories included	3 x egg tray, 1 x ice cube tray	3 x egg tray, 1 x ice cube tray	3 x egg tray, 1 x ice cube tray	3 x egg tray, 1 x ice cube tray
Height of product mm	1772	1772	1772	1772
Width of product mm	541	541	541	541
Depth of product mm	548	548	548	548

[1] Actual energy consumption will depend on how the appliance is used and where it is located.
[2] Climate zone SN = designed to operate in ambient temperature of +10°C to 32°C.
Climate zone T = designed to operate in ambient temperature of +18°C to 43°C.

Built-In Single Door Fridges & Freezers

	177CM TALL FRIDGES			
	KI8815OD0 | N90	KI1813FE0G | N70	KI2822FE0G | N50	KI1812FE0G | N50
	• 3 x Fresh Safe drawers • Home Connect • Fixed hinge / Soft Close Hinge	• 2 x Fresh Safe drawers • Fixed hinge	• 2 x Fresh Safe drawers • Low Frost • Fixed hinge	• 2 x Fresh Safe drawers • Fixed hinge
DESIGN FEATURES				
No Frost				
Low Frost or Manual defrost			•	
Soft Close hinge	•			
Type of hinge (reversible)	Fixed hinge	Fixed hinge	Fixed hinge	Fixed hinge
Home Connect	•			
FOOD FRESHNESS SYSTEM				
Fresh Safe	3 x Fresh Safe drawers	2 x Fresh Safe drawers	2 x Fresh Safe drawers	2 x Fresh Safe drawers
KEY FEATURES – FRIDGE SECTION				
Light	LED	LED	LED	LED
Super Cool function	•	•	•	•
Type of control	Electronic	Electronic	Electronic	Electronic
Number of shelves	7	7	4	6
Number of adjustable shelves	5	6	4	6
Number of door bins / shelves	6	6	5	5
Type of shelves	Safety glass	Safety glass	Safety glass	Safety glass
Temperature display	Digital LED	Digital LED	Digital LED	Digital LED
Warning signal door open	•	•	•	•
Bottle shelves in fridge	•	•		•
KEY FEATURES – FREEZER SECTION				
Super Freeze function				
Temperature adjustable in freezer				
Number of ice cube trays			1	
Number of freezer drawers				
ADDITIONAL INFORMATION				
Energy efficiency class	D	E	E	E
Energy consumption[1] kWh/annum	120	115	177	114
Total net capacity L	289	319	280	310
Freezer net capacity L			34	
Climate class[2]	SN-T	SN-T	SN-ST	SN-ST
Noise level dB(A) re 1 pW	36	37	35	35
Noise level class	C	C	B	B
Additional accessories included	3 x egg tray, 1 x bottle flex shelf	2 x egg tray	3 x egg tray, 1 x ice cube tray	3 x egg tray, 1 x bottle flex shelf
Height of product mm	1772	1772	1772	1772
Width of product mm	558	558	541	541
Depth of product mm	545	545	548	548

	177CM TALL FRIDGES		177CM TALL FREEZERS		
	KI2821SE0G | N30	KI1811SE0G | N30	GI7815NE0 | N90	GI7815CE0G | N90	GI7812EE0G | N50
	• 2 x Fresh Safe drawers • Low Frost • Sliding Hinge	• 2 x Fresh Safe drawers • Sliding Hinge	• No Frost • Home Connect • Fixed hinge/Soft Close Hinge	• No Frost • Home Connect • Fixed hinge/Soft Close Hinge	• No Frost • Fixed hinge
DESIGN FEATURES					
No Frost			•	•	•
Low Frost or Manual defrost	•				
Soft Close hinge			•	•	
Type of hinge (reversible)	Sliding hinge	Sliding hinge	Fixed hinge	Fixed hinge	Fixed hinge
Home Connect			•	•	
FOOD FRESHNESS SYSTEM					
Fresh Safe	2 x Fresh Safe drawers	2 x Fresh Safe drawers			
KEY FEATURES – FRIDGE SECTION					
Light	LED	LED			
Super Cool function	•	•			
Type of control	Electronic	Electronic			
Number of shelves	5	6			
Number of adjustable shelves	4	5			
Number of door bins / shelves	5	5			
Type of shelves	Safety glass	Safety glass			
Temperature display	Digital LED	Digital LED			
Warning signal door open	•	•			
Bottle shelves in fridge		•			
KEY FEATURES – FREEZER SECTION					
Super Freeze function			•	•	•
Temperature adjustable in freezer			•	•	•
Number of ice cube trays	1		1	1	1
Number of freezer drawers			5	5	5
ADDITIONAL INFORMATION					
Energy efficiency class	E	E	E	E	E
Energy consumption[1] kWh/annum	177	114	235	235	235
Total net capacity L	280	310	212	212	212
Freezer net capacity L	34		212	212	212
Climate class[2]	SN-ST	SN-ST	SN-T	SN-T	SN-T
Noise level dB(A) re 1 pW	35	35	35	35	35
Noise level class	B	B	B	B	B
Additional accessories included	3 x egg tray, 1 x ice cube tray	3 x egg tray	1 x ice cube tray	1 x ice cube tray	1 x ice cube tray
Height of product mm	1772	1772	1772	1772	1772
Width of product mm	541	541	558	558	558
Depth of product mm	548	548	545	545	545

[1] Actual energy consumption will depend on how the appliance is used and where it is located.
[2] Climate zone SN = designed to operate in ambient temperature of +10°C to 32°C.
Climate zone T = designed to operate in ambient temperature of +18°C to 43°C.

Built-in Single Door Fridges & Freezers

122CM TALL FRIDGES

KI1412FE0G | N50

- 1 x Fresh Safe drawer
- Fixed hinge

KI1411SE0 | N30

- 1 x Fresh Safe drawer
- Sliding hinge

122CM TALL FREEZER

GI7416CE0 | N70

- No Frost
- Sliding hinge / Soft Close Hinge

	KI1412FE0G | N50	KI1411SE0 | N30	GI7416CE0 | N70
DESIGN FEATURES			
No Frost			●
Low Frost or Manual defrost			
Soft Close hinge			●
Type of hinge (reversible)	Fixed hinge	Sliding hinge	Sliding hinge
Home Connect			
FOOD FRESHNESS SYSTEM			
Fresh Safe	1 x Fresh Safe drawer	1 x Fresh Safe drawer	
KEY FEATURES – FRIDGE SECTION			
Light	LED	LED	
Super Cool function	●	●	
Type of control	Electronic	Electronic	
Number of shelves	5	5	
Number of adjustable shelves	4	4	
Number of door bins / shelves	4	4	
Type of shelves	Safety glass	Safety glass	
Temperature display	digital LED	digital LED	
Warning signal door open	●	●	
Bottle shelves in fridge	●		
KEY FEATURES – FREEZER SECTION			
Super Freeze function			●
Temperature adjustable in freezer			●
Number of ice cube trays			1
Number of freezer drawers			5
ADDITIONAL INFORMATION			
Energy efficiency class	E	E	E
Energy consumption[1] kWh/annum	101	101	206
Total net capacity L	204	204	130
Freezer net capacity L			130
Climate class[2]	SN-ST	SN-ST	SN-T
Noise level dB(A) re 1 pW	35	35	36
Noise level class	B	B	C
Additional accessories included	2 x egg tray, 1 x bottle rack/wire shelf	3 x egg tray	1 x ice cube tray
Height of product mm	1221	1221	1221
Width of product mm	541	541	558
Depth of product mm	548	548	545

[1] Actual energy consumption will depend on how the appliance is used and where it is located.
[2] Climate zone SN = designed to operate in ambient temperature of +10°C to 32°C.
Climate zone T = designed to operate in ambient temperature of +18°C to 43°C.

Built-in Single Door Fridges & Freezers

	102CM TALL FRIDGE	87CM TALL FRIDGE	87CM TALL FRIDGE	87CM TALL FREEZER
	KI1311SE0 | N30	KI1212FE0G | N50	KI1211SE0G | N30	GI1216DE0 | N50
	• 1 x Fresh Safe drawer • Sliding hinge	• 1 x Fresh Safe drawer • Fixed hinge	• 1 x Fresh Safe drawer • Sliding hinge	• Low Frost • Home Connect • Fixed hinge / Soft Close Hinge
DESIGN FEATURES				
No Frost				
Low Frost or Manual defrost				•
Soft Close hinge				•
Type of hinge (reversible)	Sliding hinge	Fixed hinge	Sliding hinge	Fixed hinge
Home Connect				
FOOD FRESHNESS SYSTEM				
Fresh Safe	1 x Fresh Safe drawer	1 x Fresh Safe drawer	1 x Fresh Safe drawer	
KEY FEATURES – FRIDGE SECTION				
Light	LED	LED	LED	
Super Cool function	•	•	•	
Type of control	Electronic	Electronic	Electronic	
Number of shelves	4	3	3	
Number of adjustable shelves	4	2	2	
Type of shelves	3	2	2	
Temperature display	Safety glass	Safety glass	Safety glass	
Warning signal door open	Digital LED	Digital LED	Digital LED	
Defrost system in fridge	•	•	•	
Bottle shelves in fridge		•		
KEY FEATURES – FREEZER SECTION				
Super Freeze function				•
Temperature adjustable in freezer				•
Number of ice cube trays				1
Number of freezer drawers				3
ADDITIONAL INFORMATION				
Energy efficiency class	E	E	E	E
Energy consumption[1] kWh/annum	96	92	92	176
Total net capacity L	165	136	136	96
Freezer net capacity L				96
Climate class[2]	SN-ST	SN-ST	SN-ST	SN-T
Noise level dB(A) re 1 pW	35	35	35	36
Noise level class	B	B	B	C
Additional accessories included	3 x egg tray	3 x egg tray, 1 x bottle rack/wire shelf	3 x egg tray	1 x ice cube tray
Height of product mm	1021	874	874	874
Width of product mm	541	541	541	558
Depth of product mm	548	548	542	545

[1] Actual energy consumption will depend on how the appliance is used and where it is located.
[2] Climate zone SN = designed to operate in ambient temperature of +10°C to 32°C.
Climate zone T = designed to operate in ambient temperature of +18°C to 43°C.

Built-Under Single Door Fridges & Freezer

	82CM TALL FRIDGES		82CM TALL FREEZER	72CM TALL FREEZER
	KU2222FD0G | N50	KU1212FE0G | N50	GU7212FE0G | N50	GI1113FE0 | N50
	• Low Frost • Home Connect • Fixed hinge	• Home Connect • Fixed hinge	• No Frost • Home Connect • Fixed hinge	• Low Frost • Fixed hinge
DESIGN FEATURES				
No Frost			•	
Low Frost or Manual defrost	•			•
Soft Close hinge				
Type of hinge (reversible)	Fixed hinge	Fixed hinge	Fixed hinge	Fixed hinge
Home Connect	•	•	•	
FOOD FRESHNESS SYSTEM				
Fresh Safe				
KEY FEATURES – FRIDGE SECTION				
Light	LED	LED		
Super Cool	•	•		
Type of control	Electronic	Electronic		
Number of shelves	3	3		
Number of adjustable shelves	2	3		
Number of door bins / shelves	3	2		
Type of shelves	Safety glass	Safety glass		
Temperature display	Digital LED	Digital LED		
Warning signal door open	•	•		
Bottle shelves in frdge				
KEY FEATURES – FREEZER SECTION				
Super Freeze function			•	•
Temperature adjustable in freezer			•	•
Number of ice cube trays	1		1	1
Number of freezer drawers			3	3
ADDITIONAL INFORMATION				
Energy efficiency class	D	E	E	E
Energy consumption[1] kWh/annum	119	93	189	167
Total net capacity L	110	134	85	72
Freezer net capacity L	17			72
Climate class[2]	SN-T	SN-T	SN-T	SN-T
Noise level dB(A) re 1 pW	35	35	35	36
Noise level class	B	B	B	C
Additional accessories included	3 x egg tray	3 x egg tray	1 x ice cube tray	1 x ice cube tray
Height of product mm	820	820	820	712
Width of product mm	598	598	598	558
Depth of product mm	548	548	548	545

[1] Actual energy consumption will depend on how the appliance is used and where it is located.
[2] Climate zone SN = designed to operate in ambient temperature of +10°C to 32°C.
Climate zone T = designed to operate in ambient temperature of +18°C to 43°C.

XXL & XL Built-In Fridge Freezers

XXL
193.5CM TALL
60/40 SPLIT
SOFT CLOSE HINGE
KB7966DD0

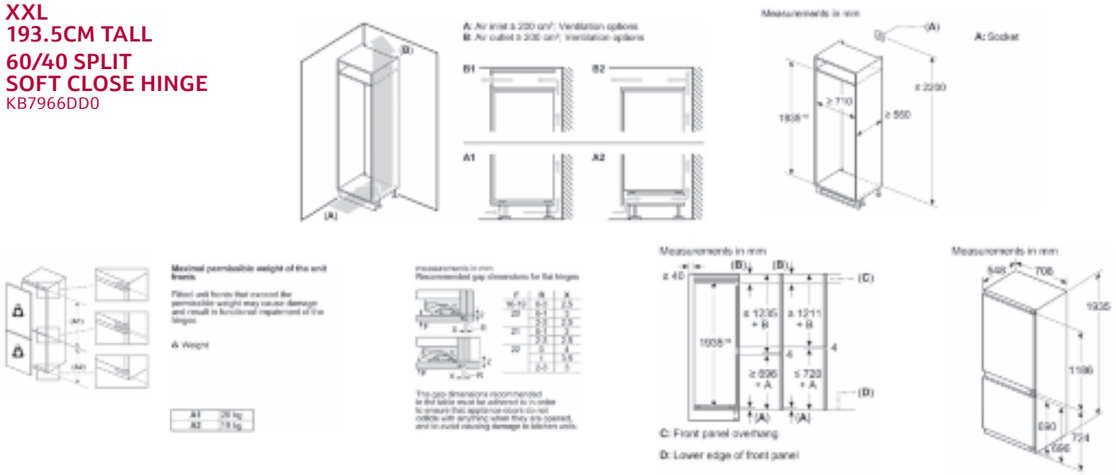

XXL
193.5CM TALL
60/40 SPLIT
SLIDING HINGE
KB7962SE0

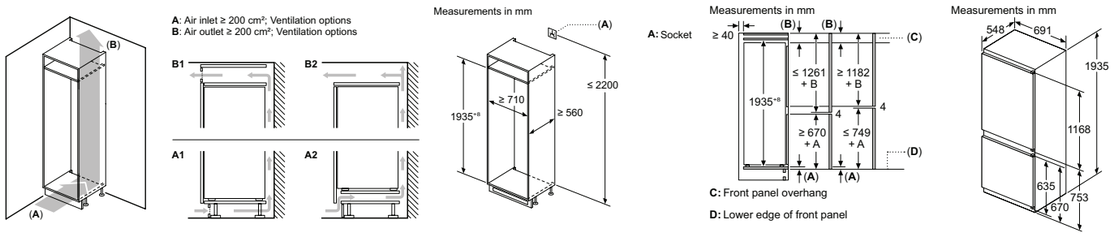

XL
193.5CM TALL
60/40 SPLIT
SLIDING HINGE
KI7961SE0

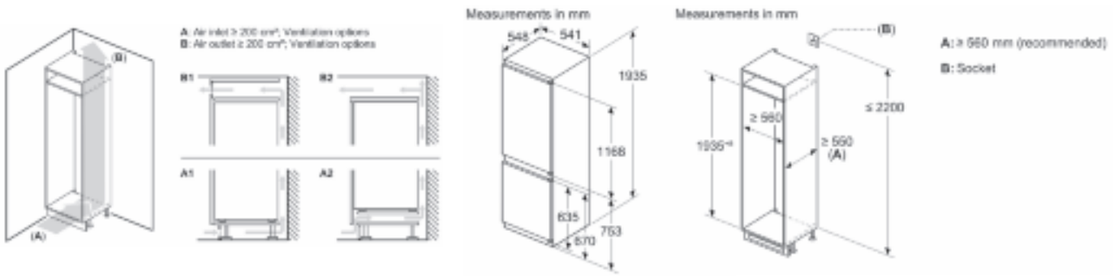

XL
193.5CM TALL
60/40 SPLIT
FIXED HINGE
KI7962FD0

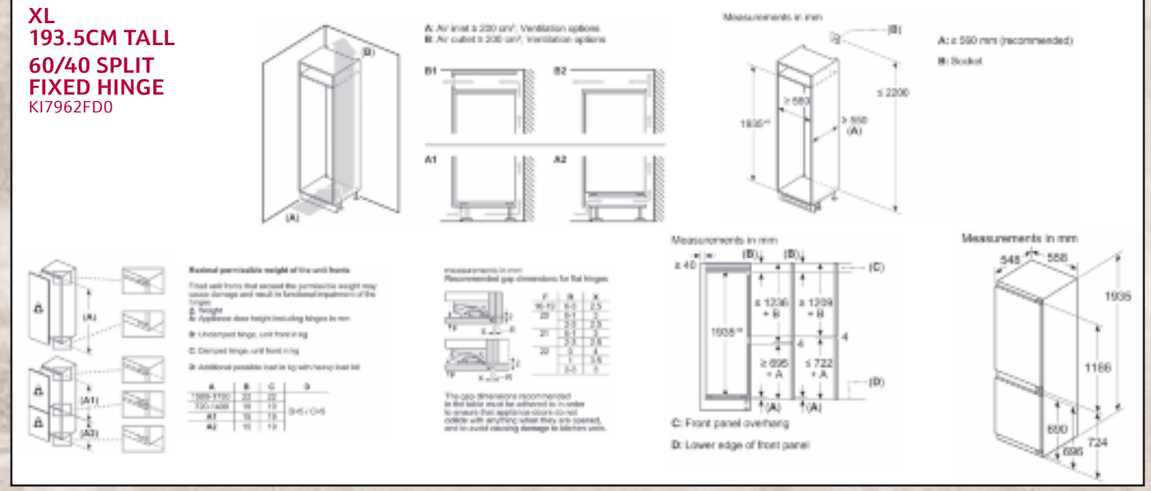

Measurements in mm. The line drawings featured in this brochure are provided as a guide to general dimensions only and are subject to amendment without prior notice.
For full dimensional and installation details please refer to the documentation supplied with the appliance.

Built Under Wine Cabinets

30CM WIDE
KU9202HF0G

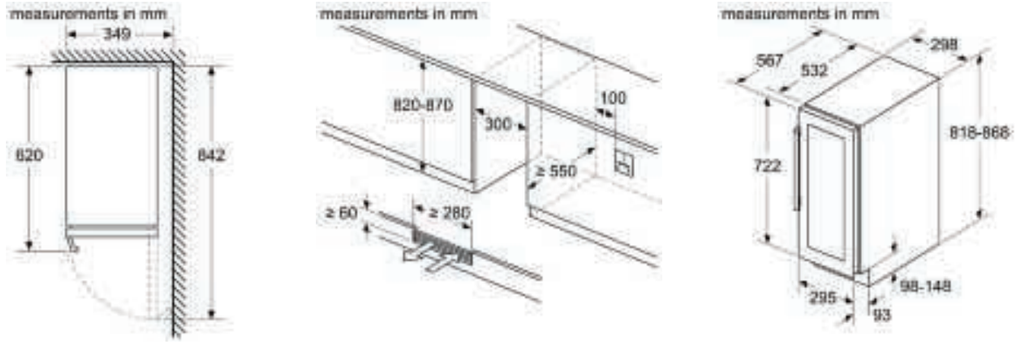

60CM WIDE
KU9213HG0G

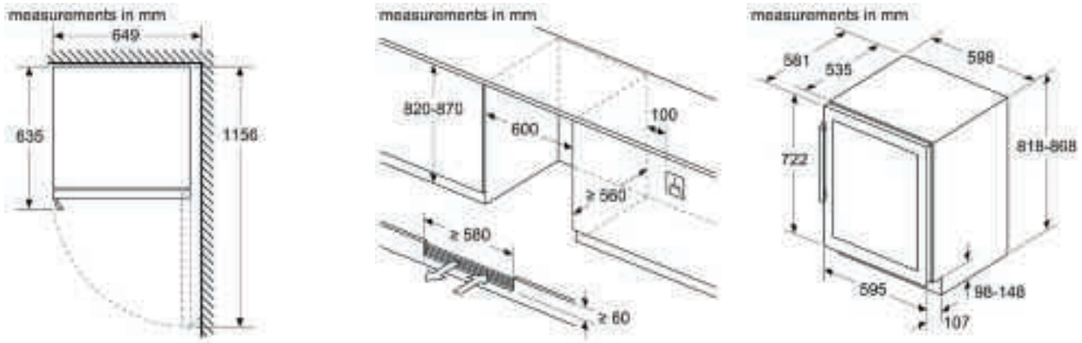

American-Style Fridge Freezer

KA3923IE0G

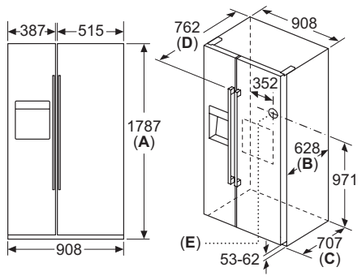

	Specifications
A	Front is adjustable from 1783 to 1792
B	Cabinet depth
C	Depth incl. door, without handle
D	Depth incl. door, with handle
E	Water connection to the appliance

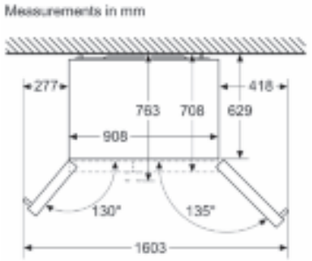

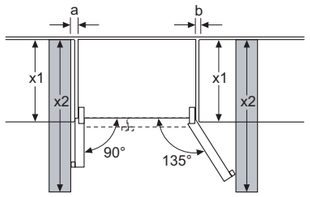

x 1 (unit depth)	a	b
600	0	0
650	20	25
700	20	76
x 2 (wall)		

Built-In Fridge Freezers

177CM TALL 70/30 SPLIT FIXED HINGE
KI6873FE0G

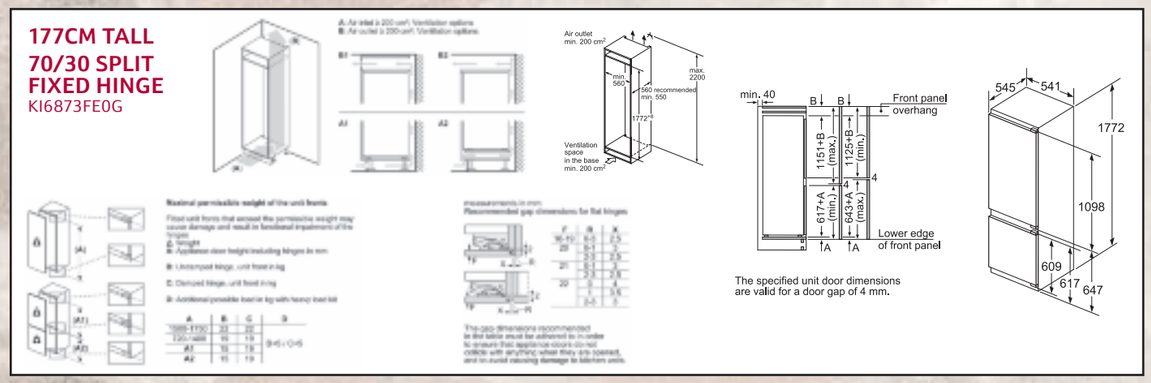

177CM TALL 70/30 SPLIT SLIDING HINGE
KI5871SE0G

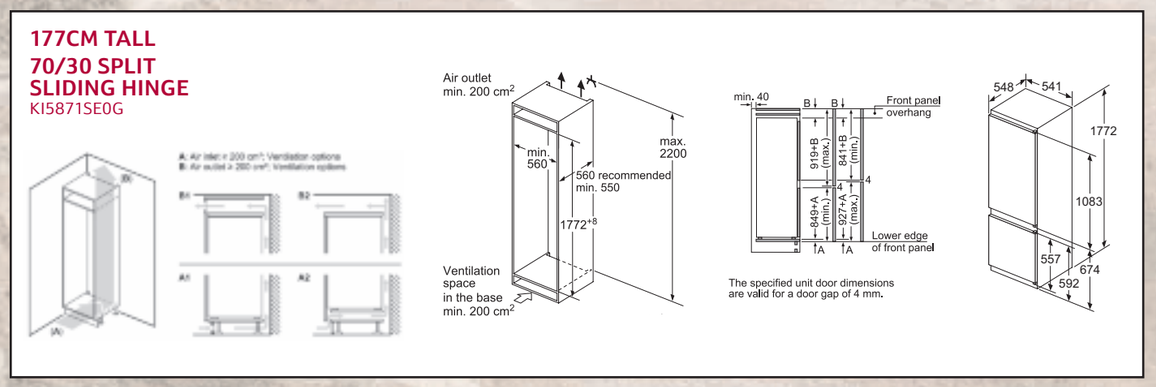

177CM TALL 60/40 SPLIT FIXED HINGE
KI7862FE0G,
KI7861FE0G

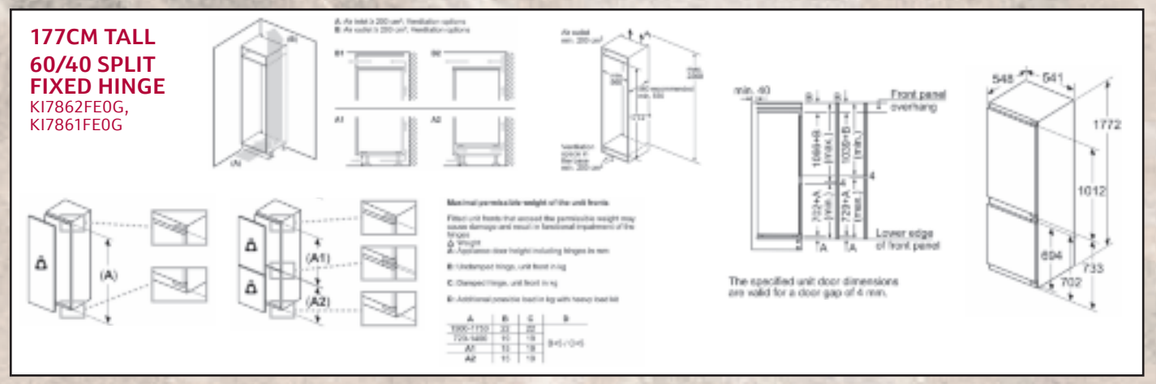

177CM TALL 60/40 SPLIT SLIDING HINGE
KI7862SE0G,
KI7861SE0G

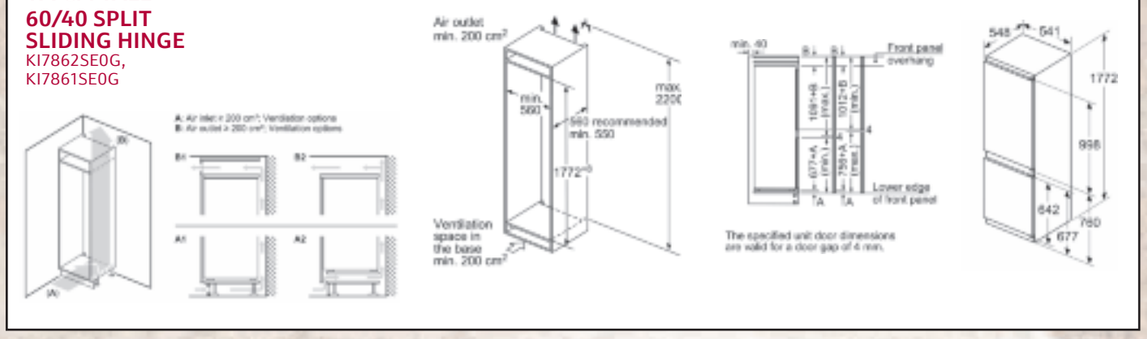

Measurements in mm. The line drawings featured in this brochure are provided as a guide to general dimensions only and are subject to amendment without prior notice.
For full dimensional and installation details please refer to the documentation supplied with the appliance.

Built-In Fridge Freezers

177CM TALL 60/40 SPLIT FIXED HINGE
KI6863FE0G

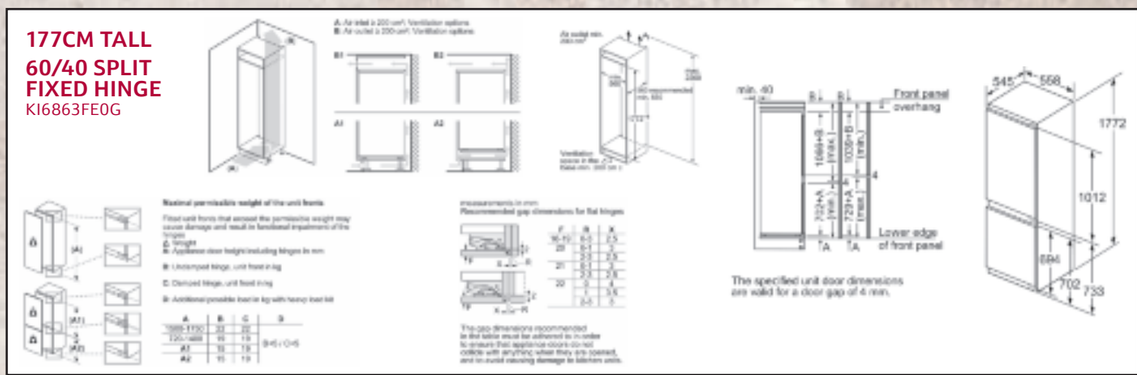

177CM TALL 50/50 SPLIT FIXED HINGE
KI7851FE0G

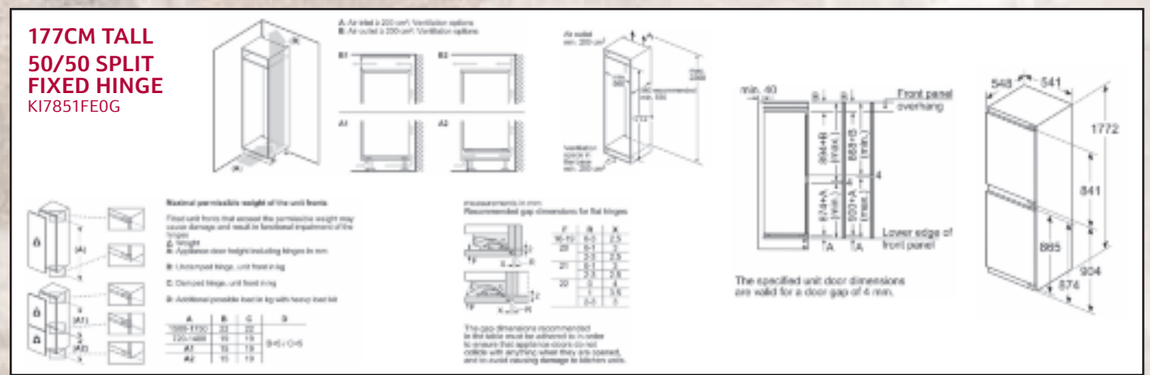

177CM TALL 70/30 SPLIT FIXED HINGE
KI5872FE0G

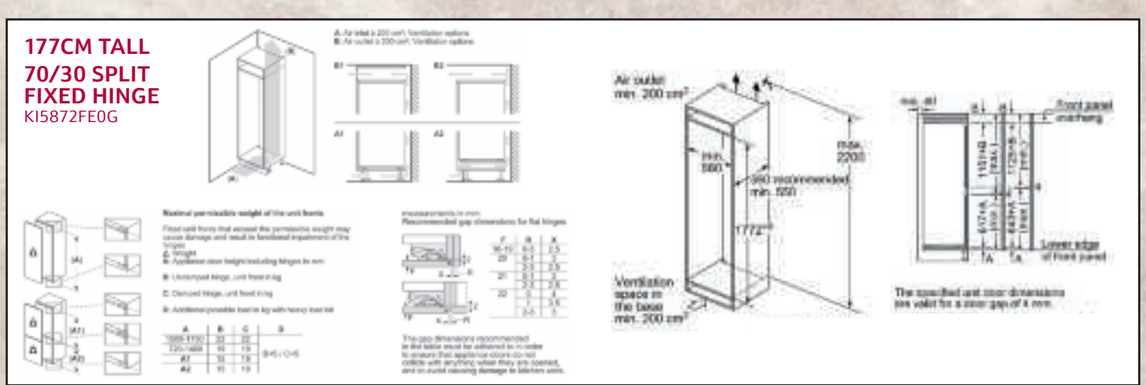

177CM TALL 50/50 SPLIT SLIDING HINGE
KI7851SE0G

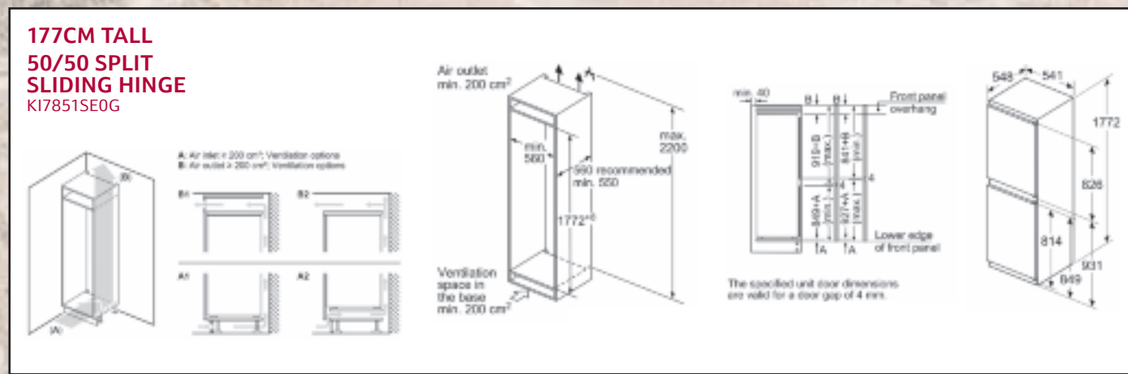

177CM TALL 70/30 SPLIT SLIDING HINGE
KI5872SE0G

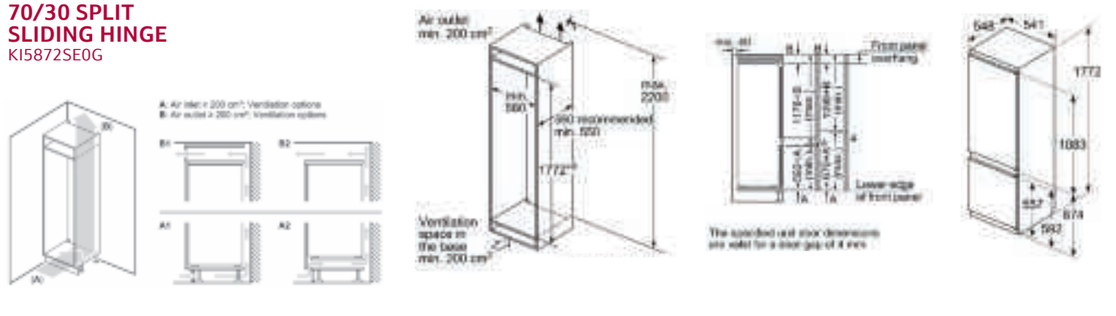

177CM TALL 60/40 SPLIT SOFT CLOSE HINGE
KI7863DD0G

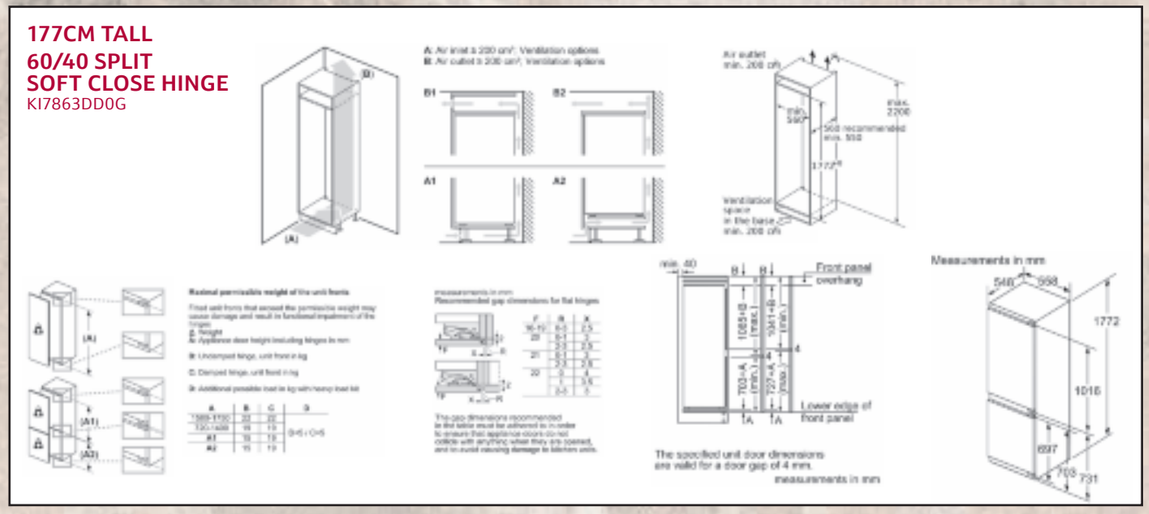

177CM TALL 60/40 SPLIT SLIDING HINGE
KI5862SE0G

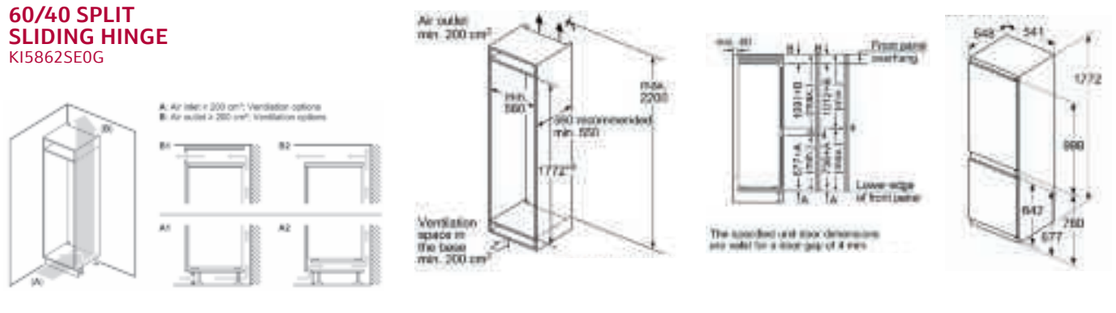

Built-In Single Door Fridges & Freezers

177CM TALL FRIDGES

FIXED HINGE
KI1813FE0, KI1812FE0G,
KI2822FE0G – WITH 4* ICE BOX

DOOR OPEN ASSIST SOFT CLOSE HINGE
KI8815OD0

SLIDING HINGE
KI1811SE0G, I2821SE0G – WITH 4* ICE BOX

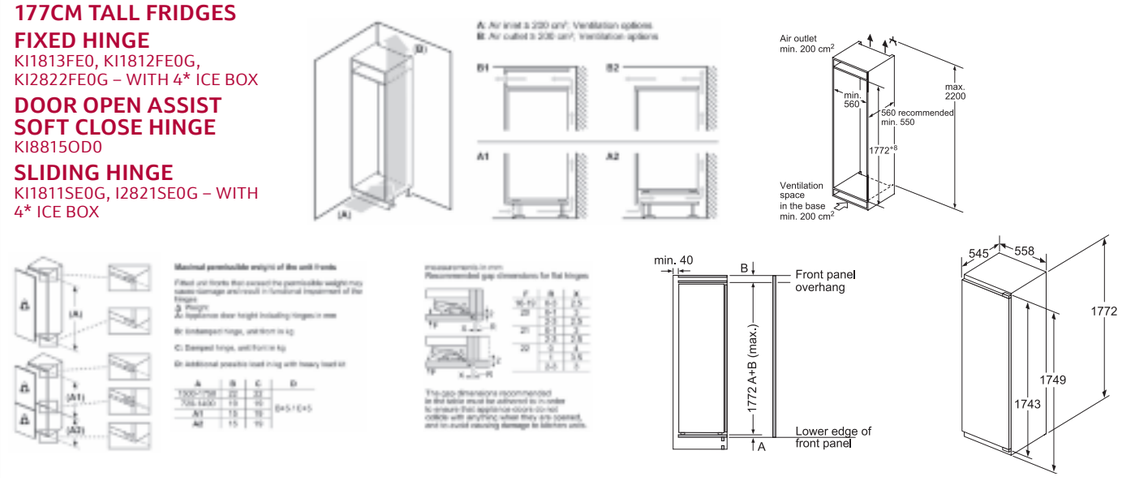

177CM TALL FREEZERS

FIXED HINGE
GI7812EE0G

SOFT CLOSE HINGE
GI7815CE0G

DOOR OPEN ASSIST SOFT CLOSE HINGE
GI7815NE0

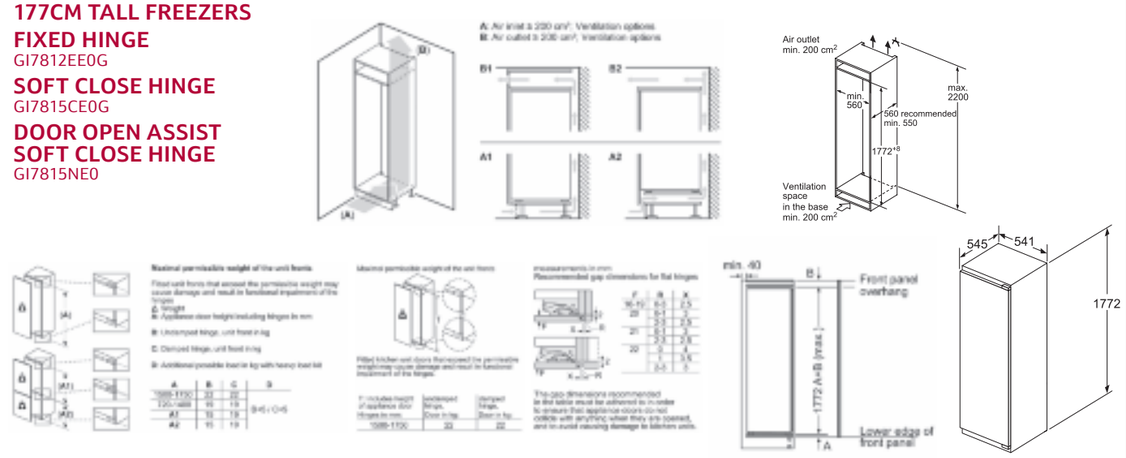

122CM TALL FRIDGES

FIXED HINGE
KI1412FE0G

SLIDING HINGE
KI1411SE0

122CM TALL FREEZER

SOFT CLOSE HINGE
GI7416CE0

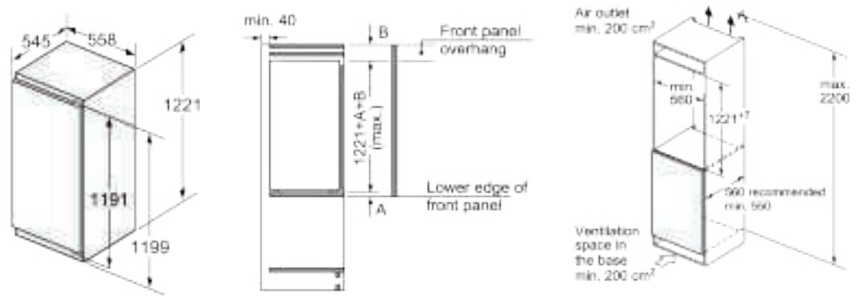

102CM TALL FRIDGE

SLIDING HINGE
KI1311SE0

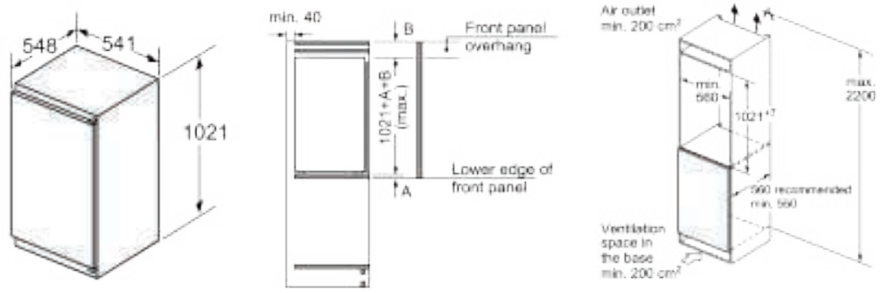

87CM TALL FRIDGES

FIXED HINGE
KI1212FE0G

SLIDING HINGE
KI1212FE0G

87CM TALL FREEZER

SOFT CLOSE HINGE
GI1216DE0

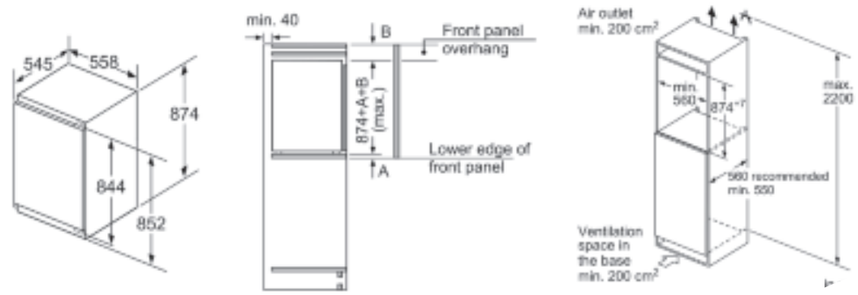

Measurements in mm. The line drawings featured in this brochure are provided as a guide to general dimensions only and are subject to amendment without prior notice.
For full dimensional and installation details please refer to the documentation supplied with the appliance.

Built-In Single Door Fridges & Freezers

82CM TALL FRIDGES
FIXED HINGE WITH ICE BOX
KU2222FD0G

FIXED HINGE
KU1212FE0G

82CM TALL FREEZER
FIXED HINGE
GU7212FE0G

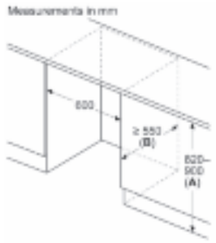

A: Substructure height

B: ≥ 550 mm (recommended)

Space for electrical connection next to the appliance on the left or right side

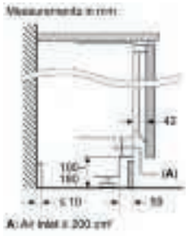

Maximal permissible weight of the unit fronts

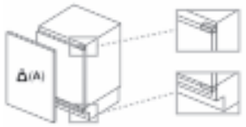

Fitted unit fronts that exceed the permissible weight may cause damage and result in functional impairment of the hinges

A: Weight ≤ 12 kg

measurements in mm
Recommended gap dimensions for flat hinges

F	R	X
16–19	0–3	2,5
20	0–1	3
	2–3	2,5
21	0–1	3
	2–3	2,5
22	0	4
	1	3,5
	2–3	3

The gap dimensions recommended in the table must be adhered to in order to ensure that appliance doors do not collide with anything when they are opened, and to avoid causing damage to kitchen units.

Measurements in mm

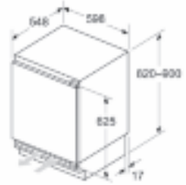

72CM TALL FREEZER
FIXED HINGE
GI1113FE0

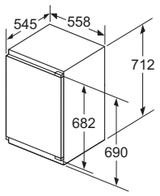

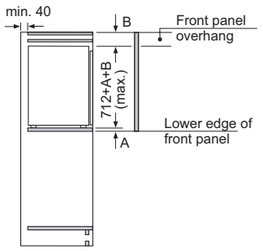

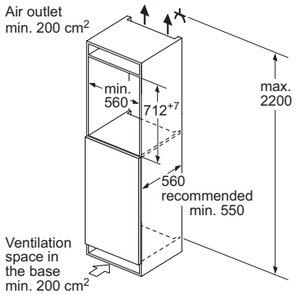

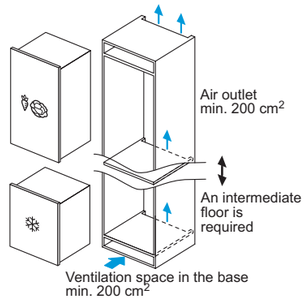

Measurements in mm. The line drawings featured in this brochure are provided as a guide to general dimensions only and are subject to amendment without prior notice.
For full dimensional and installation details please refer to the documentation supplied with the appliance.

NEFF DISHWASHER *Range*

5 Year Warranty

Peace of mind built-in – all of NEFF's dishwashers are covered by our **5 year** warranty – clearly marked in the matrix tables.
Further warranty information can be found on NEFF Customer Service pages 184-185.

Dishwasher Solutions

Clean dishes, whatever your wishes

- Range includes fully integrated, semi-integrated and slimline.
- Flexible installation solutions including 81.5cm and 86.5cm Vario Hinge options.
- Comprehensive range of cleaning features including Chef 70°C and Eco 50°C as standard.

Full Size Dishwashers

Designed to be as flexible and accommodating as possible, our full-sized dishwashers have adjustable baskets and racks to hold large or awkward items, as well as a choice of wash cycles, from intensive to delicate.

Featured model: S187ZCX03G N70 60cm Fully Integrated Dishwasher

Slimline Dishwashers

Where space is an issue, our Slimline model **S875HKX21G** is ideal. Just 45cm wide, it fits into the smallest of spaces, but still offers all the features of a full size model. It's surprisingly roomy and able to cope with nine place settings at a time.

Featured model: S875HK21G N50 45cm Fully Integrated Dishwasher

Feature Highlights

- **All dishwasher models come with Home Connect**
- **Water consumption – 60cm width 9.5L/45cm width 8.5L**
- **10 year anti-rust warranty**
- **Noise level 42 -48dB**

The models from the collections can include:

SERIES FUNCTIONS			
Product Function	N 70*	N 50*	N 30*
Flex 2 Baskets	•	•	
Flex 1 Baskets			•
Flex Cutlery Drawer	•	•	•
Number of Options	5	5	5
Timelight / Infolight	•/	•/•	/•
DoorOpen Assist	•	•	
Open Dry	•		
White Emotion Light	•		
Zeolith	•		
Intelligent			
Gap Illumination		•	
Vario Hinge		•	

*The features included in each collection are an overview only. Please ensure you check the product detail for exact features of each model.

Dishwasher Flexibility

Flex Baskets

Fitting casserole dishes, large pans, full dinner sets and tall-stem wine glasses into a dishwasher can be a challenge – especially when you're cleaning your most robust cookware alongside delicate items. Our Flex Baskets are designed to accommodate those bulkier items and provide an even, thorough clean. We have two options of basket flexibility to choose from.

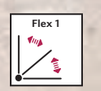

Flex 1

Two foldable flip tines in the top basket and two foldable flip tines in the bottom basket offer quick and easy loading flexibility for safe positioning of glasses, cups, pots and pans.

Flex 2

Two foldable flip tines in the top basket and four foldable flip tines in the bottom basket offer quick and easy loading flexibility for safe positioning of glasses, cups, pots and pans.

Flex 3

Six foldable flip tines in the top basket and eight foldable flip tines in the bottom basket offer quick and easy loading flexibility for safe positioning of glasses, cups, pots and pans.

Flex Cutlery Drawer

Transform your third loading level into a versatile cutlery drawer. It handily clicks into place whenever you need a tailor-made space for your forks, knives, and small kitchen utensils.

Rack-Matic

Allows the top basket to be raised and lowered as needed as well as run on an angle to cater for the wine glasses at the end of the night.

Backlit Push Button Control with LED Display

FULLY INTEGRATED DISHWASHER 60CM WIDTH								
Description	No of Programmes	Energy Rating	Place Settings	Energy / Water Consumption	Noise Level	VarioHinge	DoorOpen Assist	Model Number
Flex 3 Baskets with Zeolith	7	A	14	54kWh / 9.5L	43dB		•	S187TC800E
Flex 2 Baskets with Zeolith	7	B	14	65kWh / 9L	40dB		•	S187ZCX03G
Flex 2 Baskets with Vario Hinge, 86.5cm height	7	D	14	85kWh / 9L	42dB	86.5cm / Vario Hinge	•	S295HCX02G
Flex 2 Baskets with Vario Hinge, 81.5cm height	7	D	14	85kWh / 9L	42dB	81.5cm / Vario Hinge	•	S195HCX02G
Flex 1 Baskets with Vario Hinge, 81.5cm height	7	D	13	84kWh / 9L	46dB	81.5cm / Vario Hinge		S175HTX06G
Flex 2 Baskets with Rack Matic and Time Light	7	C	14	75kWh / 9L	40dB			S155ECX07G
Flex 2 Baskets with Rack Matic and Info Light	7	D	14	85kWh / 9L	46dB			S155HVX00G
SEMI INTEGRATED DISHWASHER 60CM WIDTH								
Flex 1 Baskets with 24hr Time Delay	7	D	13	84kWh / 9L	46dB			S145HTS01G
FULLY INTEGRATED SLIMLINE DISHWASHER 45CM WIDTH								
Flex 1 Baskets with Rack Matic and Info Light	7	B	10	76kWh / 8.9L	44dB	81.5cm / Vario Hinge		S875HKX21G

Toggle Control with LED Display

FULLY INTEGRATED DISHWASHER 60CM WIDTH						
Features	No of Programmes	Energy Rating	Place Settings	Energy / Water Consumption	Noise Level	Model Number
Flex 1 Baskets with Info Light	6	D	13	84kWh / 9L	42dB	S153HKX03G
Normal Baskets with Info Light	6	D	13	84kWh / 9L	46dB	S153HTX02G
Normal Baskets with Info Light	6	E	12	92kWh / 10.5L	50dB	S153ITX02G

Accessories	Model Number
Decor strip - For full size Polinox base models, 81.5cm height	Z780BI02
Decor strip - For full size and slimline Stainless Steel base models, 81.5cm height	Z780BI01
Decor strip - For full size Stainless Steel base models, 86.5cm height	Z780BI11
Decor strip - For full size Stainless Steel base models installed off the ground, 81.5cm height	Z7860X3
Decor strip - For full size Stainless Steel base models installed off the ground, 86.5cm height	Z7861X3
Split door furniture connection rail	Z788BI00
Cutlery Basket - 60cm Dishwashers	Z7863X0

Key Functions Guide

Design Features

AQUA STOP
Protects inlet and outlet hoses from leakage. A safety valve prevents any more water from entering the dishwasher and overflowing – even when the machine is off.

OPEN DRY
No need to manually open the door of your dishwasher to allow the load to cool off. Open Dry takes care of that by opening the door automatically during the drying phase.

INFO LIGHT
Info Light projects a red light onto the floor that showcases clearly that this dishwasher is in operation. Info Light is available for fully integrated dishwashers.

HEAT EXCHANGER
Ensures that the drying phase of programmes is energy efficient and glassware is fully protected by preventing extreme temperatures.

DOOR OPEN ASSIST
Door Open Assist is the perfect solution for anybody looking to achieve a sleek, handleless design in their kitchen. Simply press lightly on the front of the unit to open the dishwasher door. Ideal for a range of integrated designs, Door Open Assist is also a convenient addition to busy kitchens. Electronic child lock can be activated, creating a double push to open.

ZEOLITH
The Zeolith compartment, located under the dishwasher cavity, contains natural minerals. During the drying phase, these minerals absorb moisture and release hot air. This ensures efficient drying and leaves an impressive sheen on items of all shapes and sizes, including difficult-to-dry plastic goods. And because they recharge during the next washing cycle, you get great, longlasting drying results, without the maintenance worries.

GAP ILLUMINATION
Gap Illumination shines a soft white light on the side of the dishwasher to indicate the dishwasher is running. If you pause the cycle or open the door, the light will start blinking. This feature is available across Vario Hinge models.

TIME LIGHT
Time Light projects the remaining time as well as the ongoing process of the programme on any type of kitchen floor. Time Light is available for fully integrated dishwashers and washing machines.

VARIO HINGE
Vario Hinge lets you install your dishwasher at floor level or higher. When you open the door, it lifts up the front panel so that it opens freely and doesn't make contact with base underneath. Now you don't have to compromise on kitchen design, and your dishwasher will combine effortlessly with every other unit.

EMOTION LIGHT
LED lights in the front edge light up the dishwasher cavity.

GLASS CARE SYSTEM
Your dishwasher has a thing for delicate glassware, so it fine-tunes the water hardness to protect your glassware with never-ending care. A combination of the Glass 40° programme and Extra Shine option will clean your items impeccably without worry. With the introduction of anti-slip surfaces, silicon inserts and supports within Flex 2 baskets your glassware has never been more protected.

10-YEAR, ANTI-RUST WARRANTY
Due to advanced materials and manufacturing technologies, in addition to our standard appliance warranty, we're able to provide a free-of-charge warranty against the rusting-through of the dishwasher's inner cavity.

Programmes

FAVOURITE
Choose a programme, option, or combination on your dishwasher and save it as "Favourite", either via your Home Connect app or directly on the dishwasher.

1 HOUR 65°
No need to stack your dinner or party dishes for hours, simply load the dishwasher again. This function cleans and dries dishes in only 60 minutes. Spend more quality time with family and friends while enjoying food and tales using your favourite tableware.

EASY CLEAN
Give your dishwasher a deep clean with the new Easy Clean programme. Simply run the high temperature setting together with some dishwasher cleaner in an empty machine to remove limescale and grease from inside the cavity.

SILENCE
'Silence on demand' whenever you wish for peace and calm select this option via the Home Connect app. On activation the cycle will pause for 30 minutes. You have the flexibility to restart the cycle at anytime if you wish, after 30 minutes the programme will resume.

AUTOMATIC PROGRAMMES
Take the worry out of selecting exactly the right programme and let the machine do it for you. Automatically changes settings to ensure you get the best clean for your load.

CHEF 70°C
With a hotter setting and a powerful spray, the Chef 70° programme is perfect for cleaning even the dirtiest pots, pans and cooking utensils. Items placed in the lower basket are subject to higher spray pressures, eliminating the need for soaking and effectively removing even the most stubborn stains.

Special Functions

EXTRA SPEED
Depending on the selected programme you can reduce the running time of your dishwasher's programme to up to 66%. Make more of your quality time and enjoy optimum cleaning and drying results - while Extra Speed takes care of the load up to three times faster.

POWER ZONE
Activates higher wash temperatures and increases spray arm pressure in the bottom basket, while maintaining a more gentle wash in the top basket.

EXTRA SHINE
By increasing the amount of water during the rinse cycle and extending the drying phase, water marks are prevented and the drying result is further improved.

EXTRA HYGIENE
Provides a hotter final rinse, with 70°C water for 10 minutes, to effectively cleanse items such as chopping boards and cooking utensils*.

*Please note this programme does not sterilise.

60cm Fully Integrated Dishwashers

	ZEOLITH	
	S187TC800E | N70	**S187ZCX03G | N70**
	• Flex 3 baskets • Zeolith Technology • Open Dry • Time Light • Door open assist	• Flex 2 baskets • Zeolith Technology • Time Light • Quiet – 40dB • Door open assist
Control panel colour	Stainless steel	Stainless steel
Height (cm) / Hinge type	81.5 / Fixed	81.5 / Fixed
DESIGN FEATURES		
Drying system	Zeolith / Open Dry	Zeolith
Home Connect Wi-Fi connectivity	●	●
Control panel type	Push buttons + LED	Push buttons + LED
Basket description	Flex 3	Flex 2
Flex Cutlery Drawer (3rd loading level)	Flex Cutlery Drawer	Flex Cutlery Drawer
Status indicator	Time Light (White)	Time Light (White)
Door open assist	●	●
Glass care technology	●	●
Anti-slip protection / stemware support upper basket	● / ●	● / ●
Adjustable upper basket[6]	Rack Matic 3-stage	Rack Matic 3-stage
Number of flip tines in upper / lower basket	6 / 8	6 / 6
Cup shelves upper / lower baskets	2 / 2	2 / 2
Cutlery holder lower basket		
Largest loadable dish upper[7] / lower basket (cm)	21 / 30	21 / 30
Aqua sensor	●	●
Real-time clock		
Start delay time max hours	24	24
Emotion light (interior lighting)	●	
End of cycle indicator	Acoustic	Acoustic
Salt / Rinse aid light indicator	● / ●	● / ●
Self cleaning filter system	●	●
Flood protection system	Aqua Stop	Aqua Stop
Safety features	Door lock	Door lock
PROGRAMMES / FUNCTIONS		
List of programmes	Eco 50 °C, Auto 45-65 °C, Chef 70 °C, Classic 60 °C, Glass 40 °C, Favourite, Easy Clean	Eco 50 °C, Auto 45-65 °C, Chef 70 °C, Classic 60 °C, Glass 40 °C, Favourite, Easy Clean
Additional special options	Remote Start, Extra Dry, Power Zone, Extra Speed	Remote Start, Extra Shine, Power Zone, Extra Speed
TECHNICAL SPECIFICATIONS		
Reference programme for measurements	Eco 50 °C	Eco 50 °C
Energy efficiency class[1]	A	B
Energy[2] / water[3] : kWh / litres	54 / 9.5	65 / 9
Load capacity (place settings)	14	14
Programme duration[4] : h:min	4:55	3:35
Noise level: dB (A) re 1 pW	43	40
Noise efficiency class	B	B
Noise level (silence programme): dB (A) re 1 pW		
Length of electrical supply cord (cm)	175	175
Length inlet / outlet hose (cm)	165 / 190	165 / 190
Maximum height for installation (mm)	875	875
Maximum height adjustability feet (mm)	60	60
Maximum width for installation (mm)	600	600
Height of the product (mm)	815	815
Width / Depth of the product (mm)	598 / 550	598 / 550
Net weight / Gross weight (kg)	44 / 46	38 / 40
Water softener[5]	●	●
Maximum accepted water hardness (°DH)	50	50
Maximum temperature for water intake (°C)	60	60
Interior cavity	Stainless steel	Stainless steel
Included accessories	Steam protection plate	Steam protection plate

All of our dishwashers have Aqua Stop water protection, detergent aware, Dosage Assist and a door lock as standard. All NEFF dishwashers are suitable for use with doors from 2.5kg-8.5kg apart from SlimLine S875HKX20G (2.5kg to 7.5kg) and VarioHinge models S195HCX26G and S295HCX26G (4.5kg to 11.0kg) if the correct door springs are installed.

	VARIO HINGE		
	S295HCX02G | N50	**S195HCX02G | N50**	**S175HTX06G | N50**
	• Flex 2 baskets • Vario Hinge – 86.5cm height • Gap Illumination • Door open assist • Flex Cutlery Drawer	• Flex 2 baskets • Vario Hinge – 81.5cm height • Gap Illumination • Door open assist • Flex Cutlery Drawer	• Flex 1 baskets • Vario Hinge – 81.5cm height • Info Light
Control panel colour	Stainless steel	Stainless steel	Stainless steel
Height (cm) / Hinge type	86.5 / Vario Hinge	81.5 / Vario Hinge	81.5 / Vario Hinge
DESIGN FEATURES			
Drying system	Heat exchanger	Heat exchanger	Heat exchanger
Home Connect Wi-Fi connectivity	●	●	●
Control panel type	Push buttons + LED	Push buttons + LED	Push buttons + LED
Basket description	Flex 2	Flex 2	Flex 1
Flex Cutlery Drawer (3rd loading level)	Flex Cutlery Drawer	Flex Cutlery Drawer	
Status indicator	Gap Illumination (White)	Gap Illumination (White)	Info Light (Red)
Door open assist	●	●	
Glass care technology	●	●	●
Anti-slip protection / stemware support upper basket	● / ●	● / ●	
Adjustable upper basket[6]	Rack Matic 3-stage	Rack Matic 3-stage	Height adjustable top basket
Number of flip tines in upper / lower basket	6 / 6	6 / 6	- / 2
Cup shelves upper / lower baskets	2 / 2	2 / 2	2 / -
Cutlery holder lower basket			●
Largest loadable dish upper[7] / lower basket (cm)	23 / 33	21 / 30	27 / 30
Aqua sensor	●	●	●
Real-time clock			
Start delay time max hours	24	24	24
Emotion light (interior lighting)			
End of cycle indicator	Acoustic	Acoustic	Acoustic
Salt / Rinse aid light indicator	● / ●	● / ●	● / ●
Self cleaning filter system	●	●	●
Flood protection system	Aqua Stop	Aqua Stop	Aqua Stop
Safety features	Door lock	Door lock	Door lock
PROGRAMMES / FUNCTIONS			
List of programmes	Eco 50 °C, Auto 45-65 °C, Chef 70 °C, Classic 60 °C, Glass 40 °C, Favourite, Easy Clean	Eco 50 °C, Auto 45-65 °C, Chef 70 °C, Classic 60 °C, Glass 40 °C, Favourite, Easy Clean	Eco 50 °C, Auto 45-65 °C, Chef 70 °C, Classic 60 °C, Glass 40 °C, Favourite, Easy Clean
Additional special options	Remote Start, Extra Dry, Power Zone, Extra Speed	Remote Start, Extra Dry, Power Zone, Extra Speed	Remote Start, Extra Dry, Power Zone, Extra Speed
TECHNICAL SPECIFICATIONS			
Reference programme for measurements	Eco 50 °C	Eco 50 °C	Eco 50 °C
Energy efficiency class[1]	D	D	D
Energy[2] / water[3] : kWh / litres	85 / 9	85 / 9	84 / 9
Load capacity (place settings)	14	14	13
Programme duration[4] : h:min	4:30	4:30	4:30
Noise level: dB (A) re 1 pW	42	42	46
Noise efficiency class	B	B	C
Noise level (silence programme): dB (A) re 1 pW			
Length of electrical supply cord (cm)	175	175	175
Length inlet / outlet hose (cm)	165 / 190	165 / 190	165 / 190
Maximum height for installation (mm)	925	875	875
Maximum height adjustability feet (mm)	60	60	60
Maximum width for installation (mm)	600	600	600
Height of the product (mm)	865	815	815
Width / Depth of the product (mm)	598 / 550	598 / 550	598 / 550
Net weight / Gross weight (kg)	39 / 41	37 / 39	31 / 34
Water softener[5]	●	●	●
Maximum accepted water hardness (°DH)	50	50	50
Maximum temperature for water intake (°C)	60	60	60
Interior cavity	Stainless steel	Stainless steel	Stainless steel / Polinox
Included accessories	Steam protection plate	Steam protection plate	Steam protection plate

● = Yes, model has this feature

[1] On an energy-efficiency class scale from A to G.
[2] Energy consumption in kWh/100 operating cycles (using Eco programme).
[3] Water consumption in litres/operating cycle (using Eco programme).
[4] Duration of Eco programme.
[5] We would recommend our dishwashers are connected to the mains water supply where possible. However, they may also be connected to an external water softener as long as the water softener produces softened water of less than 1.1 mmo/litre (7.0°e) and the water softener in the appliance is turned off. Please contact product advice for further information. Water pressure required: 0.5-10 Bar. Flow rate: 10 litres per minute. Inlet valve connected directly to ¾" screwed joint.
[6] Adjustable upper basket is 2-stage Rackmatic™ when Flex 3rd Basket is installed.
[7] Largest loadable dish height in upper basket will be smaller when Flex 3rd Basket is installed.

60cm Fully & Semi Integrated Dishwashers

	RACK MATIC		INFO LIGHT			SEMI-INTEGRATED
	S155ECX07G | N50	**S155HVX00G | N50**	**S153HKX03G | N30**	**S153HTX02G | N30**	**S153ITX02G | N30**	**S145HTS01G | N50**
	• Flex 2 baskets • Rack Matic 3-stage • Time Light • Quiet – 40dB • Flex Cutlery Drawer	• Flex 2 baskets • Rack Matic 3-stage • Info Light • Flex Cutlery Drawer	• Flex 1 baskets • Height adjustable top basket • Info Light	• Normal baskets • Info Light	• Normal baskets • Info Light	• Flex 1 baskets • Height adjustable top basket
				LAUNCHING JULY 2024	DISCONTINUING DECEMBER 2024	
Control panel colour	Stainless steel	Stainless steel	Stainless steel	Stainless steel	Stainless steel	Stainless steel
Height (cm) / Hinge type	81.5 / Fixed	81.5 / Fixed	81.5 / Fixed	81.5 / Fixed	81.5 / Fixed	81.5 / Fixed
DESIGN FEATURES						
Drying system	Heat exchanger	Heat exchanger	Heat exchanger	Heat exchanger	Heat exchanger	Heat exchanger
Home Connect Wi-Fi connectivity	●	●	●	●	●	●
Control panel type	Push buttons + LED	Push buttons + LED	Toggle control + LED	Toggle control + LED	Toggle control + LED	Push buttons + LED
Basket description	Flex 2	Flex 2	Flex 1	Normal	Normal	Flex 1
Flex Cutlery Drawer (3rd loading level)	Flex Cutlery Drawer	Flex Cutlery Drawer				
Status indicator	Time Light (White)	Info Light (Red)	Info Light (Red)	Info Light (Red)	Info Light (Red)	
Door open assist						
Glass care technology	●	●	●	●	●	●
Anti-slip protection / stemware support upper basket	● / ●					
Adjustable upper basket[6]	Rack Matic 3-stage	Rack Matic 3-stage	Height adjustable top basket			Height adjustable top basket
Number of flip tines in upper / lower basket	6 / 6	2 / 4	- / 2	- / -	- / -	- / 2
Cup shelves upper / lower baskets	2 / 2	2 / -	2 / -	2 / -	2 / -	2 / -
Cutlery holder lower basket			●	●	●	●
Largest loadable dish upper[7] / lower basket (cm)	21 / 30	21 / 30	27 / 30	22 / 30	22 / 30	27 / 30
Aqua sensor	●	●	●	●	●	●
Real-time clock						
Start delay time max hours	24	24	9	9	9	24
Emotion light (interior lighting)						
End of cycle indicator	Acoustic	Acoustic	Acoustic	Acoustic	Acoustic	
Salt / Rinse aid light indicator	● / ●	● / ●	● / ●	● / ●	● / ●	● / ●
Self cleaning filter system	●	●	●	●	●	●
Flood protection system	Aqua Stop	Aqua Stop	Aqua Stop	Aqua Stop	Aqua Stop	Aqua Stop
Safety features	Door lock	Door lock	Door lock	Door lock	Door lock	Control panel lock, door lock
PROGRAMMES / FUNCTIONS						
List of programmes	Eco 50 °C, Auto 45-65 °C, Chef 70 °C, Classic 60 °C, Glass 40 °C, Favourite, Easy Clean	Eco 50 °C, Auto 45-65 °C, Chef 70 °C, Classic 60 °C, Glass 40 °C, Favourite, Easy Clean	Eco 50 °C, Auto 45-65 °C, Chef 70 °C, Classic 60 °C, Glass 40 °C, Favourite, Easy Clean	Eco 50 °C, Auto 45-65 °C, Chef 70 °C, Classic 60 °C, Favourite, Easy Clean	Eco 50 °C, Auto 45-65 °C, Chef 70 °C, 1h 65 °C, Favourite, Easy Clean	Eco 50 °C, Auto 45-65 °C, Chef 70 °C, 1h 65 °C, Glass 40 °C, Favourite, Easy Clean
Additional special options	Remote Start, Extra Dry, Power Zone, Extra Speed	Remote Start, Extra Dry, Power Zone, Extra Speed	Remote Start, Extra Dry, Power Zone, Extra Speed	Remote Start, Extra Dry, Power Zone, Extra Speed	Remote Start, Extra Dry, Power Zone, Extra Speed	Remote Start, Extra Dry, Power Zone, Extra Speed
TECHNICAL SPECIFICATIONS						
Reference programme for measurements	Eco 50 °C	Eco 50 °C	Eco 50 °C	Eco 50 °C	Eco 50 °C	Eco 50 °C
Energy efficiency class[1]	C	D	D	D	E	D
Energy[2] / water[3] : kWh / litres	75 / 9	85 / 9	84 / 9	84 / 9	92 / 10.5	84 / 9
Load capacity (place settings)	14	14	13	13	12	13
Programme duration[4] : h:min	3:20	4:30	4:30	4:30	4:30	4:30
Noise level: dB (A) re 1 pW	40	46	42	46	50	46
Noise efficiency class	C	C	B	C	C	C
Noise level (silence programme): dB (A) re 1 pW						
Length of electrical supply cord (cm)	175	175	175	175	175	175
Length inlet / outlet hose (cm)	165 / 190	165 / 190	165 / 190	165 / 190	165 / 190	165 / 190
Maximum height for installation (mm)	875	875	875	875	875	875
Maximum height adjustability feet (mm)	60	60	60	60	60	60
Maximum width for installation (mm)	600	600	600	600	600	600
Height of the product (mm)	815	815	815	815	815	815
Width / Depth of the product (mm)	598 / 550	598 / 550	598 / 550	598 / 550	598 / 550	598 / 573
Net weight / Gross weight (kg)	36 / 38	34 / 38	32 / 34	30 / 32	30 / 32	31 / 34
Water softener[5]	●	●	●	●	●	●
Maximum accepted water hardness (°DH)	50	50	35	50	50	50
Maximum temperature for water intake (°C)	60	60	60	60	60	60
Interior cavity	Stainless steel	Stainless steel / Polinox	Stainless steel	Stainless steel / Polinox	Stainless steel / Polinox	Stainless steel / Polinox
Included accessories	Steam protection plate	Steam protection plate	Steam protection plate	Steam protection plate	Steam protection plate	Steam protection plate

All of our dishwashers have Aqua Stop water protection, detergent aware, Dosage Assist and a door lock as standard. All NEFF dishwashers are suitable for use with doors from 2.5kg-8.5kg apart from SlimLine S875HKX20G (2.5kg to 7.5kg) and VarioHinge models S195HCX26G and S295HCX26G (4.5kg to 11.0kg) if the correct door springs are installed.

● = Yes, model has this feature

[1] On an energy-efficiency class scale from A to G.
[2] Energy consumption in kWh/100 operating cycles (using Eco programme).
[3] Water consumption in litres/operating cycle (using Eco programme).
[4] Duration of Eco programme.
[5] We would recommend our dishwashers are connected to the mains water supply where possible. However, they may also be connected to an external water softener as long as the water softener produces softened water of less than 1.1 mmo/litre (7.0°e) and the water softener in the appliance is turned off. Please contact product advice for further information. Water pressure required: 0.5-10 Bar. Flow rate: 10 litres per minute. Inlet valve connected directly to ¾" screwed joint.
[6] Adjustable upper basket is 2-stage Rackmatic™ when Flex 3rd Basket is installed.
[7] Largest loadable dish height in upper basket will be smaller when Flex 3rd Basket is installed.

45cm Slimline Dishwasher

VARIO HINGE

S875HKX21G | N50

- Flex 1 baskets
- Vario Hinge – 81.5cm height
- Rack Matic 3-stage
- Info Light

5 years

Control panel colour	Stainless steel
Height (cm) / Hinge type	81.5 / Vario Hinge
DESIGN FEATURES	
Drying system	Heat exchanger
Home Connect Wi-Fi connectivity	●
Control panel type	Push buttons + LED
Basket description	Flex 1
Flex Cutlery Drawer (3rd loading level)	
Status indicator	Info Light (Red)
Door open assist	
Glass care technology	●
Anti-slip protection / stemware support upper basket	● / -
Adjustable upper basket[6]	Rack Matic 3-stage
Number of flip tines in upper / lower basket	2 / 2
Cup shelves upper / lower baskets	2 / 1
Cutlery holder lower basket	●
Largest loadable dish upper[7] / lower basket (cm)	27 / 30
Aqua sensor	●
Real-time clock	
Start delay time max hours	24
Emotion light (interior lighting)	
End of cycle indicator	Acoustic
Salt / Rinse aid light indicator	● / ●
Self cleaning filter system	●
Flood protection system	Aqua Stop
Safety features	Door lock
PROGRAMMES / FUNCTIONS	
List of programmes	Eco 50 °C, Auto 45-65 °C, Chef 70 °C, Classic 60 °C, Glass 40 °C, Favourite, Easy Clean
Additional special options	Remote Start, Extra Dry, Power Zone, Extra Speed
TECHNICAL SPECIFICATIONS	
Reference programme for measurements	Eco 50 °C
Energy efficiency class[1]	E
Energy[2] / water[3] : kWh / litres	76 / 8.9
Load capacity (place settings)	10
Programme duration[4] : h:min	3:40
Noise level: dB (A) re 1 pW	44
Noise efficiency class	B
Noise level (silence programme): dB (A) re 1 pW	
Length of electrical supply cord (cm)	175
Length inlet / outlet hose (cm)	165 / 205
Maximum height for installation (mm)	875
Maximum height adjustability feet (mm)	60
Maximum width for installation (mm)	450
Height of the product (mm)	815
Width / Depth of the product (mm)	448 / 550
Net weight / Gross weight (kg)	28 / 30
Water softener[5]	●
Maximum accepted water hardness (°DH)	50
Maximum temperature for water intake (°C)	60
Interior cavity	Stainless steel
Included accessories	Steam protection plate

● = Yes, model has this feature

[1] On an energy-efficiency class scale from A to G.
[2] Energy consumption in kWh/100 operating cycles (using Eco programme).
[3] Water consumption in litres/operating cycle (using Eco programme).
[4] Duration of Eco programme.
[5] We would recommend our dishwashers are connected to the mains water supply where possible. However, they may also be connected to an external water softener as long as the water softener produces softened water of less than 1.1 mmo/litre (7.0°e) and the water softener in the appliance is turned off. Please contact product advice for further information. Water pressure required: 0.5-10 Bar. Flow rate: 10 litres per minute. Inlet valve connected directly to ¾" screwed joint.
[6] Adjustable upper basket is 2-stage Rackmatic™ when Flex 3rd Basket is installed.
[7] Largest loadable dish height in upper basket will be smaller when Flex 3rd Basket is installed.

All of our dishwashers have Aqua Stop water protection, detergent aware, Dosage Assist and a door lock as standard. All NEFF dishwashers are suitable for use with doors from 2.5kg-8.5kg apart from SlimLine S875HKX20G (2.5kg to 7.5kg) and Vario Hinge models S195HCX26G and S295HCX26G (4.5kg to 11.0kg) if the correct door springs are installed.

60cm Fully Integrated Dishwashers

S145HTS01G, S187ZCX03G, S155ECX07G, S155HAX27G, S153HKX03G, S153HTX02G, S153ITX02G, S195HCX02G, S175HTX06G, S295HCX02G, S155HVX00G

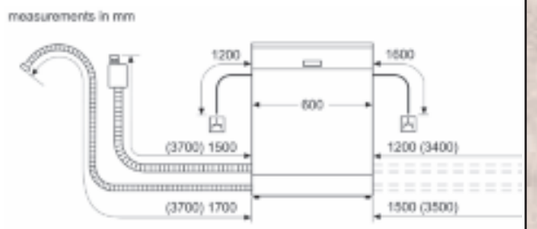

S187ZCX03G, S155ECX07G, S155HAX27G, S153HKX03G, S153HTX02G, S153ITX02G, S195HCX02G, S175HTX06G, S155HVX00G

Aqua Stop

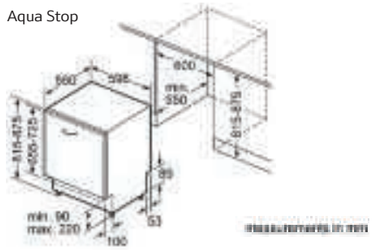

S145HTS01G

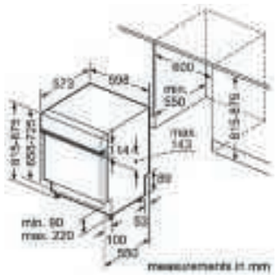

S295HCX02G

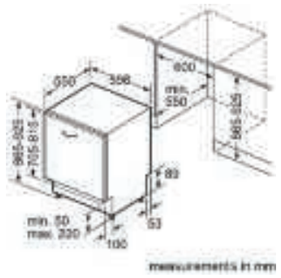

S187TC800E

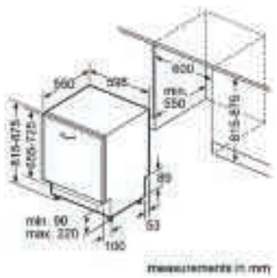

Measurements in mm. The line drawings featured in this brochure are provided as a guide to general dimensions only and are subject to amendment without prior notice.
For full dimensional and installation details please refer to the documentation supplied with the appliance.

45cm Slim Line Dishwasher

S875HKX21G

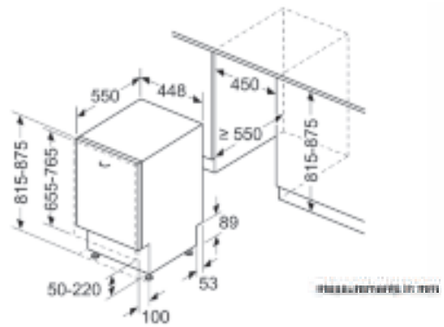

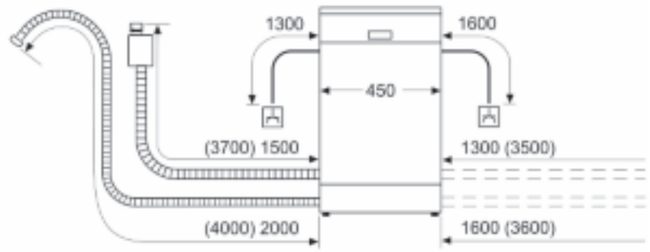

Measurements in mm. The line drawings featured in this brochure are provided as a guide to general dimensions only and are subject to amendment without prior notice.
For full dimensional and installation details please refer to the documentation supplied with the appliance.

NEFF
LAUNDRY RANGE

- Comprehensive range of laundry solutions.
- 3 types of laundry appliances
  - Integrated Washing Machines
  - Integrated Washer Dryers
  - Freestanding Washer Dryer – ideal for a utility room
- All feature our signature innovations.
- Features that suit an open plan kitchen installation with laundry as part of it include;
  - Time Light to see when the cycle has ended.
  - Anti Vibration Side panels to minimise noise.
- All features detailed in the following section.

5 Year Warranty

Peace of mind built-in – many of NEFF's laundry appliances are covered by our **5 year** warranty – clearly marked in the matrix tables.
Further warranty information can be found on NEFF Customer Service pages 184-185.

Key Functions Guide

Key Features

INTELLIGENT WATER SYSTEM
Efficient washing is made simple with our built-in load sensor. With up to 256 load levels distinguished and a flow sensor for detecting the kind of textile, the amount of water used is tailored to your wash.

SENSOR DRYING
Continuously monitors the drying performance using sophisticated sensors to prevent overheating and over drying. The dryer stops automatically when the correct level of dryness is reached to deliver the finest fabric care and reduce ironing.

TIME LIGHT
The time remaining of the wash cycle is clearly projected on to any floor surface. So you don't have to open the door to see when your washing will be finished. Perfect for open plan kitchens. Featured on model W544BX2GB.

ANTI-VIBRATION SIDE PANELS
Our new side panels increase stability and reduce vibrations during even the fastest spin cycle. With a 3-step system which absorbs motor vibrations, centres unbalanced laundry and compensates for vibrations on the side walls, you benefit from low noise washing with every load.

ECO BAR / ECO BAR PLUS
Know how much energy you are using with the new Eco Bar feature, available on selected freestanding appliances. The LED bar displays five possible consumption levels. With Eco Bar Plus, energy and water consumption is displayed, giving you an indication of resources used on your chosen programme and options. The fewer LEDs illuminated, the more energy you are saving.

Additional Features

TIME DELAY
Allows you to programme the machine up to 24 hours in advance to suit any schedule or to take advantage of off-peak electricity rates.

DRUM LIGHT
The new drum interior LED light is a big help when unloading your fully-integrated NEFF built-in washing machine. It lights up the inside brightly enough so you'll never overlook another item of laundry.

AQUA STOP / AQUA SECURE PLUS
Protects inlet hoses from leakage. A safety valve prevents any more water from entering the washing machine.

RELOAD FUNCTION
If you need to add or remove an item after the programme has started, you can pause the cycle by pressing the Start/Reload button. The machine will check whether you can open the door and, if so, it lets you. To resume operation, just press the Start/Reload button again.

Programmes

STAIN-REMOVAL PROGRAMME
Banish even the most stubborn stains with our stain-specific programmes. With dedicated settings for red wine spillages, tomato splashes and butter/oil residue, there's no need to worry about cooking-related stains.

DRUM CLEAN WITH REMINDER
Prevent odours and germs with our handy Drum Clean reminder. When the machine detects a consecutive number of low washing temperatures (<40°), you'll be prompted to start the Drum Clean programme.

Options

LESS IRONING
Reduces the creasing of clothes as the water is gently removed from the wash with a light interval spin at the end of the cycle.

EXTRA RINSE OPTION
Available on almost every programme, it's especially helpful for sensitive skin.

FLEXI TIME
Cuts programme times by up to 30%. Simply select the cycle you wish to run and then select Flexi Time.

Some features are relevant for freestanding models only. For full details please refer to the website.

Integrated Laundry

WASHING MACHINES

	W544BX2GB	W543BX2GB
	• Time Light • Speed Perfect • Reload function • Targeted Stain Removal • Variable Temperature	• Speed Perfect • Reload function
KEY FEATURES		
Time Light	●	
Speed Perfect	●	●
Reload function	●	●
Targeted stain removal	●	
Reduced noise wash	●	
ADDITIONAL FEATURES		
Time delay h	24	24
Control panel lock	●	●
Water protection system	Aqua Stop	Aqua Stop
PROGRAMMES / FUNCTIONS		
Cottons	●	●
Eco 40-60	●	●
Easy-care programme	●	●
Wool programme	●	●
Super Quick 15 / 30'	●	●
Mixed load	●	●
Shirts	●	●
Stain removal	Tomatoes, Red Wine, Butter/Oil	
Delicates / Silk	●	●
Rinse	●	●
Spin / Drain	●	●
Drum Clean	●	
OPTIONS		
Pre-wash	●	●
Extra rinse	●	●
Variable temperature / Variable spin	●/●	/●
PERFORMANCE / TECHNICAL INFORMATION		
Energy efficiency class[1]	C	C
Load capacity kg	1-8	1-8
Energy[2] / Water[3] kWh / litres	62 / 45	62 / 45
Programme duration[4] h:mm	3:16	3:16
Maximum spin speed[5] rpm	1400	1400
Spin efficiency class	B	B
Noise level dB(A) re 1 pW	66	66
Noise emission class	A	A
Dimensions of the product h x w x d (inc.hinge and 19mm door) mm	818 x 596 x 544 (574)	818 x 596 x 544 (574)
Door opening angle	130°	130°
Depth with open door 90° mm	956	956
Height adjustability mm	120	120
Length of electrical supply cord cm	210	210
Length of supply hose / drain hose cm	220/220	220/220
Door hinge (porthole)	Left-hand	Left-hand

Not all options and programmes are shown, this is a guide, please refer to the website for more details. [1]On an energy-efficiency class scale from A to G. [2]Energy consumption in kWh/100 operating cycles (using Eco 40-60 programme). [3]Water consumption in litres/operating cycle (using Eco 40-60 programme). [4]Duration of Eco 40-60 programme. [5]The specified value is rounded.

Freestanding

WASHER DRYERS

	V6540X3GB	V6320X2GB
	• Sensor Controlled Drying • Super Quick 15' • Reduced noise wash • Mixed Load • Variable Temperature	
KEY FEATURES		
Electronic control dial	●	●
Time selection options	●	●
Sensor controlled drying	●	
ADDITIONAL FEATURES		
Time delay h	24	19
Control panel lock	●	●
Water protection system	Aqua Stop	Aqua Secure
STANDARD PROGRAMMES		
Cottons	●	●
Eco 40-60	●	●
Easy-care programme	●	●
Wool programme	●	●
Delicates / Silk	●	●
Intensive dry	●	●
Gentle dry	●	●
ADDITIONAL PROGRAMMES		
Super Quick 15'	●	
Reduced noise wash	●	
Sportswear	●	
Mixed load	●	
Fluff removal programme	●	●
OPTIONS		
Flexi Time	●	●
Intensive	●	●
Pre-wash	●	●
Extra rinse	●	●
Less ironing	●	●
Variable temperature	●	
Variable spin speed	●	●
PERFORMANCE / TECHNICAL INFORMATION		
Energy efficiency class washing and drying[1]	E	E
Energy efficiency class washing[2]	E	E
Energy[3] / Water[4] washing and drying kWh / litres	266 / 68	266 / 68
Energy[5] / Water[6] washing kWh / litres	77 / 44	77 / 44
Load capacity washing and drying / washing kg	1-4 / 1-7	1-4 / 1-7
Programme duration[7] washing and drying / washing h:mm	5:30 / 2:50	5:30 / 2:50
Spin efficiency class	B	B
Spin speed[8] rpm	1355	1355
Noise level dB(A) re 1 pW	72	72
Noise emission class	A	A
Dimensions of the product h x w x d (inc.hinge and 20mm door) mm	820 x 595 x 584	820 x 595 x 584
Door opening angle	95°	95°
Depth with open door 90° mm	960	960
Height adjustability mm	15	15
Length of electrical supply cord cm	220	220
Length of supply hose / drain hose cm	200 / 200	200 / 200
Door hinge (porthole)	Left-hand	Left-hand

Not all options and programmes are shown, this is a guide, please refer to the website for more details. [1, 2]On an energy-efficiency class scale from A to G. [3]Energy consumption in kWh/100 complete operating cycles (using Eco 40-60 programme). [4]Water consumption in litres/complete operating cycle (using Eco 40-60 programme). [5]Energy consumption in kWh/100 wash cycles (using Eco 40-60 programme) [6]Water consumption in litres/wash cycle (using Eco 40-60 programme). [7]Duration of Eco 40-60 programme, complete operating cycle/wash cycle. [8]The specified value is rounded.

WASHER DRYER

	VNA341U8GB
	• Auto Dry • Sensor drying • Rapid 15' / Wash & Dry 60' • Speed Perfect
KEY FEATURES	
Auto Dry - Sensor Drying	●
Anti Vibration design	●
Anti Crease cycle	
Reload facility	●
ADDITIONAL FEATURES	
Time delay h	24
Control panel lock	●
Interior drum light	
Water protection system	Aqua Secure
PROGRAMMES / FUNCTIONS	
Eco 40-60	●
Cottons	●
Refresh	●
Easy-care programme	●
Mixed load	●
Delicates / Silk	●
Wool programme	●
Red wine	●
Rapid 15' / Wash & Dry 60'	●
Intensive Dry	●
Gentle Dry	●
My time Dry	●
Prewash	●
Easy Iron	●
Speed Perfect	●
Variable temperature / Variable spin	●
PERFORMANCE / TECHNICAL INFORMATION	
Energy efficiency class washing and drying[1]	E
Energy efficiency class washing[2]	C
Energy efficiency class drying	
Energy[3] / Water[4] washing and drying kWh / litres	313 / 70
Energy[5] / Water[6] washing kWh / litres	63 / 41
Load capacity washing and drying /washing kg	kg
Programme duration[7] washing and drying / washing h:mm	7:30 / 3:32
Spin efficiency class	B
Spin speed[8] rpm	1400
Capacity cotton kg	8
Ambient temperature range °C	
Noise level dB(A) re 1 pW	70
Noise efficiency class	A
Dimensions of the product h x w x d (inc. door porthole) mm	848 x 598 x 590 (635)
Door opening angle	165°
Depth with door open 90° mm	1073
Door hinge (porthole)	Left-hand

[1, 2]On an energy-efficiency class scale from A to G. [3]Energy consumption in kWh/100 complete operating cycles (using Eco 40-60 programme). [4]Water consumption in litres/complete operating cycle (using Eco 40-60 programme). [5]Energy consumption in kWh/100 wash cycles (using Eco 40-60 programme). [6]Water consumption in litres/wash cycle (using Eco 40-60 programme). [7]Duration of Eco 40-60 programme, complete operating cycle/wash cycle. [8]The specified value is rounded.

Fully Integrated Laundry

Built-in Washing Machines
W544BX2GB,
W543BX2GB

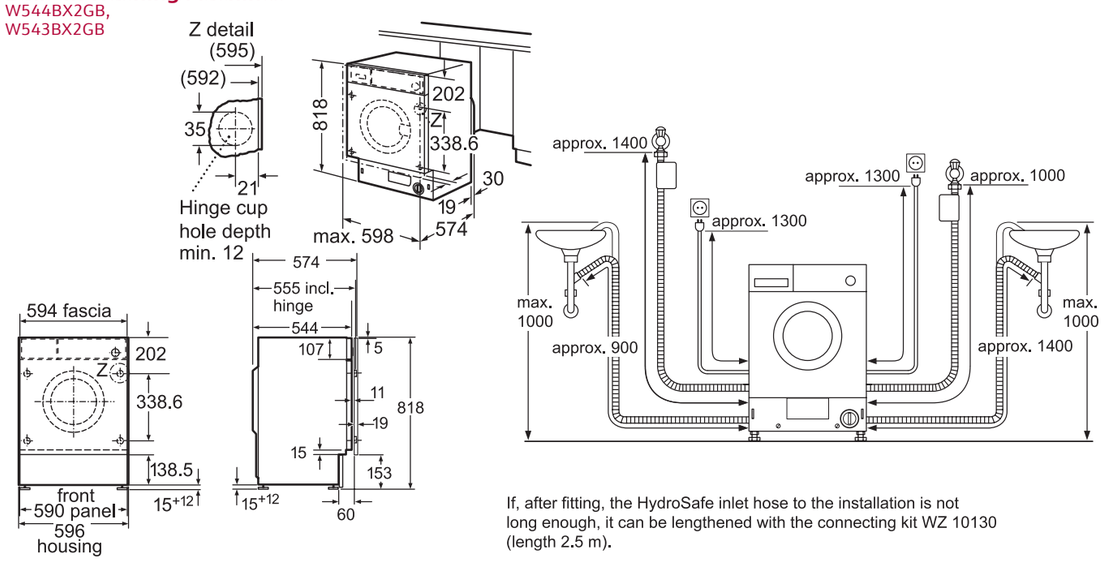

If, after fitting, the HydroSafe inlet hose to the installation is not long enough, it can be lengthened with the connecting kit WZ 10130 (length 2.5 m).

Built-in Washer Dryer
V6540X3GB

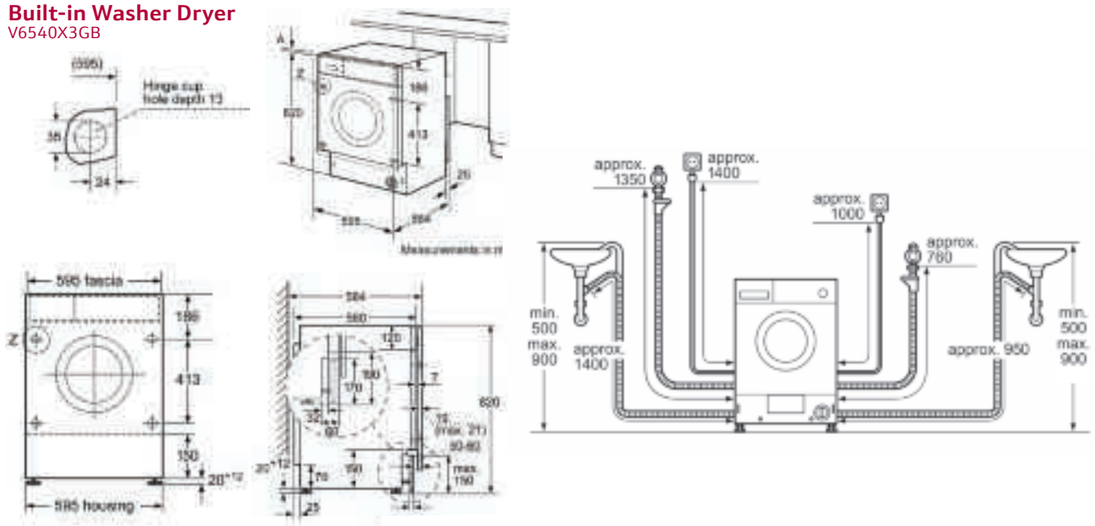

Built-in Washer Dryer
V6320X2GB

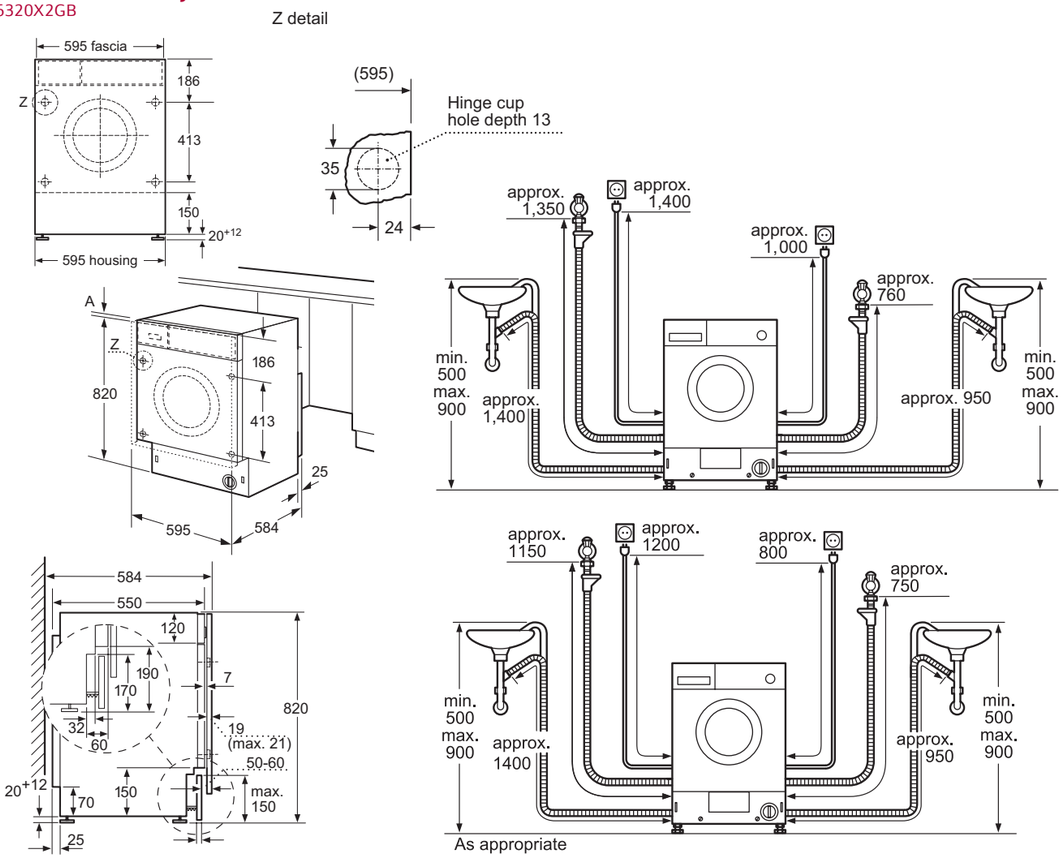

Freestanding Laundry

Freestanding Washer Dryer
VNA341U8GB

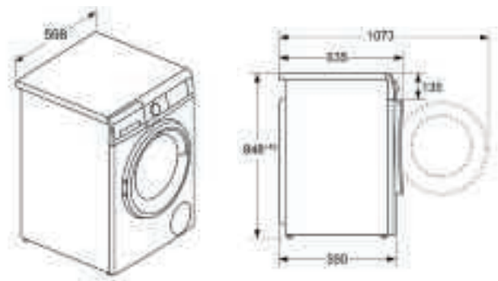

NEFF Customer Service

Here at NEFF, we understand that although our kitchens and appliances are designed to cope with even the most exacting cookaholics, sometimes you need to turn to us for help. Whether you need a visit from one of our engineers, some spare parts for your NEFF appliance or just some helpful advice, we're here to talk – around the clock*.

REPUBLIC OF IRELAND CUSTOMERS PLEASE CALL

01450 2655

VISIT OUR WEBSITE AT

NEFF-HOME.COM/IE

We're available 7 days a week. Our specialist advisors are available Monday to Friday 8am to 6pm, Saturday 9am to 5pm and Sunday 9am to 4pm. Calls are charged at the basic rate, please check with your telephone service provider for exact charges. In some areas we may use an approved service partner and the process may vary for repairs carried out by our service partners.

Please note that due to the implications of COVID-19, our contact hours and service availability are subject to change. For the latest information and updates on our services please visit our COVID-19 Service Update page on: neff-home.com/uk/coronavirus. Republic of Ireland customers should visit: neff-home.com/ie/coronavirus.

*Please note that after the working hours stated only a limited number of advisors are available.

RECEIVE THE HIGHEST STANDARDS OF SERVICE FROM NEFF

NEFF appliances are well-known for their quality and we believe that our customers deserve customer service to match. We provide expert repairs both inside and outside the manufacturer's warranty period and we can offer advice on choosing an appliance which will enhance your favourite dishes.

NEFF is a division of BSH Home Appliances Limited, a company registered in England and Wales under company registration number 01844007, with registered office at: Grand Union House, Old Wolverton Road, Wolverton, Milton Keynes, Buckinghamshire, MK12 5PT.

Register my appliance

REGISTER YOUR APPLIANCE AND WARRANTY

It is important that you register all your kitchen appliances to ensure that the manufacturer has full details in the event of an important product update. You can find out more about registering your appliances online at:

registermyappliance.org.uk

All NEFF appliances are supplied with a two-year manufacturer's warranty. Please call 0800 519 2115 (Republic of Ireland 01230 0344) to register your NEFF warranty and find out more about extending your cover.

From time to time, NEFF may present additional warranties on either products or defined components of a product which are time limited offers. To check if your product qualifies, please contact us, or go online at neff-home.com/uk/service/care-protection-and-parts/warranties

Purchase selected models between 20.03.24 - 31.03.25 and register your appliance for **5 years** warranty.

Please be aware that the above telephone number is managed by Domestic & General Services Limited who administer the warranty registration process on our behalf.

Total Excellence + Quality Winner 2023 Domestic & General

ARRANGE A VISIT FROM A NEFF ENGINEER

NEFF home appliances are built to the highest standard, but if you do need a visit from a NEFF engineer, we are here to help. Our locally based engineers are employed and trained by NEFF, which gives them unrivaled knowledge and expertise to repair NEFF appliances.

In some areas we may use an approved service partner to carry out repairs on our NEFF appliances, where the repair process may vary.

You can easily book and manage your engineer visit online at: neff-home.com/uk/service/repair/book-a-repair-online or via our call centre (see contact details above). Republic of Ireland customers should call: 01450 2655.

Calls will be answered 24 hours a day, 7 days a week. Calls are charged at the basic rate, please check with your telephone service provider for exact charges.

ACCESSORIES AND CLEANING PRODUCTS

You can find everything you need for any appliance on the NEFF online store. It's here where you'll find our tested and approved cleaning and care products, along with other accessories ranging from a Glass Holder for your new dishwasher to a Teppan Yaki for your hob, or a new set of Telescopic Rails.

Shop online at: neff-home.com/ie/store

ONLINE HELP AND PRODUCT ADVICE

Prefer to go online? You can visit our support content at: neff-home.com/ie/service to quickly find the help you need. We cover questions about usage and maintenance of your appliance, as well as tips on getting started and installing your new appliances. You'll also be able to access your user manual at any time.

GENUINE NEFF SPARE PARTS

NEFF keeps a comprehensive range of replacement spare parts for up to ten years. You can browse our exploded view diagrams on our store or speak to an advisor on the phone to help you locate and buy the spare parts you need.

neff-home.com/ie/service/care-protection-parts

Notes

cook. create. inspire.

NEFF Customer Service
Grand Union House
Old Wolverton Road
Milton Keynes
Buckinghamshire
MK12 5ZR

BSH Home Appliances Ltd.
M50 business Park
Ballymount
Dublin 12
D12 KP90
T 01 450 2655
www.neff-home.com/ie

NEFF, a division of
BSH Home Appliances Ltd.
Grand Union House
Old Wolverton Road
Wolverton
Milton Keynes
MK12 5PT
www.neff-home.com/uk