NEFF

BUILT-IN OVEN

[en] INSTRUCTION MANUAL

C17MS22G0

Table of contents

Intended use 4

Important safety information 5
General information 5
Microwave 6

Causes of damage 7
General information 7
Microwave 7

Environmental protection 8
Saving energy 8
Environmentally-friendly disposal 9

Getting to know your appliance 10
Control panel 10
Controls 10
Main menu 10
Types of heating menu 11
Cooking compartment functions 12

Accessories 12
Accessories included 12
Inserting accessories 13
Optional accessories 13

Before using for the first time 13
Initial use 13
Cleaning the cooking compartment 14
Cleaning the accessories 14

Operating the appliance 14
Switching the appliance on and off 14
Setting and starting the appliance operation 14
Changing or cancelling the appliance operation 15
Heating up the appliance quickly 15

Time-setting options 16
Showing and hiding the time-setting options 16
Setting the timer 16
Setting the cooking time 16
Start delay – "Ready at" 16
Checking, changing or deleting settings 16

Childproof lock 17
Automatic childproof lock 17
One-time childproof lock 17

Microwave 17
Cookware 17
Microwave power settings 18
Setting the microwave 18
Setting the microwave to combi-mode 19

Basic settings 20
Changing MyProfile 20
List of basic settings 20
Setting favourites 20

Sabbath mode 21
Starting Sabbath mode 21
Cancelling Sabbath mode 21

Home Connect 21
Setting up 21
Remote Start 21
Home Connect settings 22
Remote diagnostics 22
About data protection 22
Declaration of Conformity 22

Cleaning agent 23
Suitable cleaning agents 23
Surfaces in the cooking compartment 24
Keeping the appliance clean 24

Cleaning function 24
Starting 24
End 25
Subsequent cleaning 25
Removing heavy deposits of dirt 25

Rails 25
Detaching and refitting the rails 25

Appliance door 26
Removing the door cover 26
Removing and fitting the door panels 27

Trouble shooting 28
Fault table 28
Maximum operating time exceeded 28
Cooking compartment bulbs 29

Customer service 29
E number and FD number 29

Baking and roasting assistant 29
Information on the settings 29
Selecting a meal 29
Setting the food 30

Programmes 30
Information on the settings 30
Selecting a dish 31
Setting the programme 31

Tested for you in our cooking studio. 31
Silicone moulds 31
Cakes and small baked items 31
Bread and rolls. 35
Pizza, quiche and savoury cakes 37
Bakes and soufflés. 39
Poultry 40
Meat 42
Fish 45
Vegetables and side dishes. 47
Dessert. 49
Eco heating functions. 50
Acrylamide in foodstuffs. 51
Slow cook 51
Drying. 53
Preserving 53
Allowing the dough to prove at dough proving setting. . 54
Defrosting. 55
Heating food in a microwave 56
Keeping warm 57
Test dishes. 58

Additional information on products, accessories, replacement parts and services can be found at **www.neff-international.com** and in the online shop **www.neff-eshop.com**

Intended use

Read these instructions carefully. Only then will you be able to operate your appliance safely and correctly. Retain the instruction manual and installation instructions for future use or for subsequent owners.

This appliance is only intended to be fully fitted in a kitchen. Observe the special installation instructions.

Check the appliance for damage after unpacking it. Do not connect the appliance if it has been damaged in transport.

Only a licensed professional may connect appliances without plugs. Damage caused by incorrect connection is not covered under warranty.

This appliance is intended for domestic use only. The appliance must only be used for the preparation of food and drink. The appliance must be supervised during operation. Only use this appliance indoors.

This appliance is intended for use up to a maximum height of 4000 metres above sea level.

This appliance may be used by children over the age of 8 years old and by persons with reduced physical, sensory or mental capabilities or by persons with a lack of experience or knowledge if they are supervised or are instructed by a person responsible for their safety how to use the appliance safely and have understood the associated hazards.

Children must not play with, on, or around the appliance. Children must not clean the appliance or carry out general maintenance unless they are at least 15 years old and are being supervised.

Keep children below the age of 8 years old at a safe distance from the appliance and power cable.

Always slide accessories into the cooking compartment the right way round.
→ *"Accessories" on page 12*

⚠ Important safety information

General information

⚠ Warning – Risk of fire!

- Combustible items stored in the cooking compartment may catch fire. Never store combustible items in the cooking compartment. Never open the appliance door if there is smoke inside. Switch off the appliance and unplug it from the mains or switch off the circuit breaker in the fuse box.
- Loose food remnants, fat and meat juices may catch fire. Before using the appliance, remove the worst of the food remnants from the cooking compartment, heating elements and accessories.
- A draught is created when the appliance door is opened. Greaseproof paper may come into contact with the heating element and catch fire. Do not place greaseproof paper loosely over accessories during preheating. Always weight down the greaseproof paper with a dish or a baking tin. Only cover the surface required with greaseproof paper. Greaseproof paper must not protrude over the accessories.

⚠ Warning – Risk of burns!

- The appliance becomes very hot. Never touch the interior surfaces of the cooking compartment or the heating elements. Always allow the appliance to cool down. Keep children at a safe distance.
- Accessories and ovenware become very hot. Always use oven gloves to remove accessories or ovenware from the cooking compartment.
- Alcoholic vapours may catch fire in the hot cooking compartment. Never prepare food containing large quantities of drinks with a high alcohol content. Only use small quantities of drinks with a high alcohol content. Open the appliance door with care.

⚠ Warning – Risk of scalding!

- The accessible parts become hot during operation. Never touch the hot parts. Keep children at a safe distance.
- When you open the appliance door, hot steam can escape. Steam may not be visible, depending on its temperature. When opening, do not stand too close to the appliance. Open the appliance door carefully. Keep children away.
- Water in a hot cooking compartment may create hot steam. Never pour water into the cooking compartment when the cooking compartment is hot.

⚠ Warning – Risk of injury!

- Scratched glass in the appliance door may develop into a crack. Do not use a glass scraper, sharp or abrasive cleaning aids or detergents.
- The hinges on the appliance door move when opening and closing the door, and you may be trapped. Keep your hands away from the hinges.
- Components inside the appliance door may have sharp edges. Wear protective gloves.

⚠ Warning – Risk of electric shock!

- Incorrect repairs are dangerous. Repairs may only be carried out and damaged power cables replaced by one of our trained after-sales technicians. If the appliance is defective, unplug the appliance from the mains or switch off the circuit breaker in the fuse box. Contact the after-sales service.
- The cable insulation on electrical appliances may melt when touching hot parts of the appliance. Never bring electrical appliance cables into contact with hot parts of the appliance.
- Do not use any high-pressure cleaners or steam cleaners, which can result in an electric shock.
- A defective appliance may cause electric shock. Never switch on a defective appliance. Unplug the appliance from the mains or switch off the circuit breaker in the fuse box. Contact the after-sales service.

⚠ Warning – Hazard due to magnetism!

Permanent magnets are used in the control panel or in the control elements. They may affect electronic implants, e.g. heart pacemakers or insulin pumps. Wearers of electronic implants must stay at least 10 cm away from the control panel.

Microwave

⚠ Warning – Risk of fire!

- Using the appliance for anything other than its intended purpose is dangerous and may cause damage.
  The following is not permitted: drying out food or clothing, heating slippers, grain or cereal pillows, sponges, damp cleaning cloths or similar.
  For example, heated slippers and grain or cereal pillows may catch fire, even several hours after they have been heated.The appliance must only be used for the preparation of food and drinks.
- Food may catch fire. Never heat food in heat-retaining packages.
  Do not leave food heating unattended in containers made of plastic, paper or other combustible materials.
  Do not select a microwave power or time setting that is higher than necessary. Follow the information provided in this instruction manual.
  Never use the microwave to dry food.
  Never defrost or heat food with a low water content, e.g. bread, at too high a microwave power or for too long.
- Cooking oil may catch fire. Never use the microwave to heat cooking oil on its own.

⚠ Warning – Risk of explosion!

Liquids and other food may explode when in containers that have been tightly sealed. Never heat liquids or other food in containers that have been tightly sealed.

⚠ Warning – Risk of burns!

- Foods with peel or skin may burst or explode during, or even after, heating. Never cook eggs in their shells or reheat hard-boiled eggs. Never cook shellfish or crustaceans. Always prick the yolk when baking or poaching eggs. The skin of foods that have a peel or skin, such as apples, tomatoes, potatoes and sausages, may burst. Before heating, prick the peel or skin.
- Heat is not distributed evenly through baby food. Never heat baby food in closed containers. Always remove the lid or teat. Stir or shake well after the food has been heated. Check the temperature of the food before it is given to the child.
- Heated food gives off heat. The ovenware may become hot. Always use oven gloves to remove ovenware or accessories from the cooking compartment.
- Airtight packaging may burst when food is heated. Always observe the instructions on the packaging. Always use oven gloves to remove dishes from the cooking compartment.
- The accessible parts become very hot when in operation. Never touch hot parts. Keep children at a safe distance.
- At the highest settings in microwave only mode, the drying function will automatically switch on an additional heating element to heat the cooking compartment. Never touch the inside surfaces of the cooking compartment or the heating elements while they are hot. Keep children at a safe distance.
- Using the appliance for anything other than its intended purpose is dangerous.
  You are not permitted to use it to dry food or clothing or to warm slippers, grain or cereal pillows, sponges, damp cleaning cloths or the like.
  This is because, for instance, overheated slippers, grain or cereal pillows, sponges and damp cleaning cloths, etc., may cause burns to the skin.

⚠ Warning – Risk of scalding!

- There is a possibility of delayed boiling when a liquid is heated. This means that the liquid reaches boiling temperature without the usual steam bubbles rising to the surface. Even if the container only vibrates a little, the hot liquid may suddenly boil over and spatter. When heating, always place a spoon in the container. This will prevent delayed boiling.

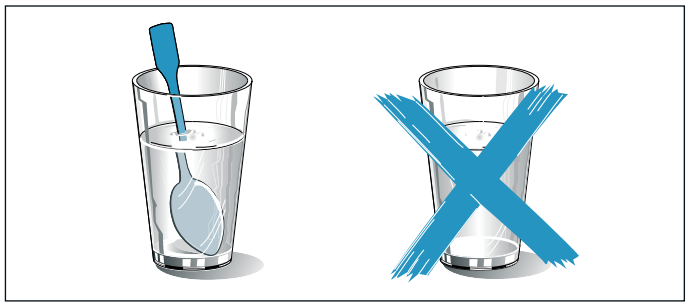

⚠ Warning – Risk of injury!

- Unsuitable ovenware may crack. Porcelain or ceramic ovenware can have small perforations in the handles or lids. These perforations conceal a cavity below. Any moisture that penetrates this cavity could cause the ovenware to crack. Only use microwave-safe ovenware.

- If using the appliance in microwave mode only, placing cookware and containers made of metal or featuring metal detailing inside the appliance may cause sparks when the appliance is operating. This may damage the appliance. Never use metal containers when using the appliance in microwave mode only.

⚠ Warning – Risk of electric shock!
The appliance is a high-voltage appliance. Never remove the casing.

⚠ Warning – Risk of serious damage to health!
- The surface of the appliance may become damaged if it is not cleaned properly. Microwave energy may escape. Clean the appliance on a regular basis, and remove any food residue immediately. Always keep the cooking compartment, door seal, door and door stop clean.
- Microwave energy may escape if the cooking compartment door or the door seal is damaged. Never use the appliance if the cooking compartment door, the door seal or the plastic door frame is damaged. Call the after-sales service.
- Microwave energy will escape from appliances that do not have any casing. Never remove the casing. For any maintenance or repair work, contact the after-sales service.

Causes of damage

General information

Caution!
- Accessories, foil, greaseproof paper or ovenware on the cooking compartment floor: do not place accessories on the cooking compartment floor. Do not cover the cooking compartment floor with any sort of foil or greaseproof paper. Do not place ovenware on the cooking compartment floor if a temperature of over 50 °C has been set. This will cause heat to accumulate. The baking and roasting times will no longer be correct and the enamel will be damaged.
- Aluminium foil: Aluminium foil in the cooking compartment must not come into contact with the door glass. This could cause permanent discolouration of the door glass.
- Water in a hot cooking compartment: do not pour water into the cooking compartment when it is hot. This will cause steam. The temperature change can cause damage to the enamel.
- Moisture in the cooking compartment: Over an extended period of time, moisture in the cooking compartment may lead to corrosion. Allow the cooking compartment to dry after use. Do not keep moist food in the closed cooking compartment for extended periods of time. Do not store food in the cooking compartment.
- Cooling with the appliance door open: Following operation at high temperatures, only allow the cooking compartment to cool down with the door closed. Do not trap anything in the appliance door. Even if the door is only left open a crack, the front of nearby furniture may become damaged over time. Only leave the cooking compartment to dry with the door open if a lot of moisture was produced whilst the oven was operating.
- Fruit juice: when baking particularly juicy fruit pies, do not pack the baking tray too generously. Fruit juice dripping from the baking tray leaves stains that cannot be removed. If possible, use the deeper universal pan.
- Extremely dirty seal: If the seal is very dirty, the appliance door will no longer close properly during operation. The fronts of adjacent units could be damaged. Always keep the seal clean. Never operate the appliance if the seal is damaged or missing.
- Appliance door as a seat, shelf or worktop: Do not sit on the appliance door, or place or hang anything on it. Do not place any cookware or accessories on the appliance door.
- Inserting accessories: depending on the appliance model, accessories can scratch the door panel when closing the appliance door. Always insert the accessories into the cooking compartment as far as they will go.
- Carrying the appliance: do not carry or hold the appliance by the door handle. The door handle cannot support the weight of the appliance and could break.

Microwave

Caution!
- Creation of sparks: Metal – e.g. a spoon in a glass – must be kept at least 2 cm from the cooking compartment walls and the inside of the door. Sparks can irreparably damage the glass on the inside of the door.
- Combining accessories: Do not combine the wire rack with the universal pan. Sparks may be created if they are inserted directly on top of one another. Only insert them into their own shelf level.
- Microwave only: The universal pan and baking tray are unsuitable when using the microwave only. If you use either of these, this may create sparks, which may damage the cooking compartment. Place cookware on the wire rack provided, or place it in the microwave and set a type of heating.
- Foil containers: Do not use foil containers in the appliance. They damage the appliance by producing sparks.

- Operating the microwave without food: Operating the appliance without food in the cooking compartment may lead to overloading. Never switch on the microwave unless there is food inside. The short crockery test is the exception to this rule.
  → *"Microwave" on page 17*

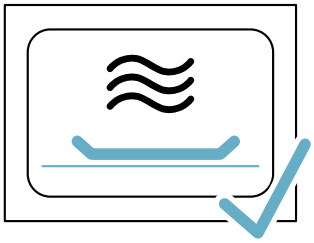

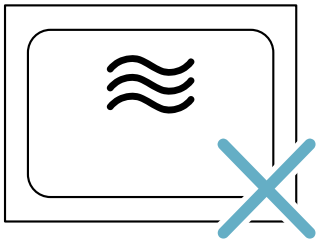

- Microwave popcorn: Never set the microwave output too high. Use a maximum microwave output of 600 watts. Always place the popcorn bag on a glass plate. The door panels may crack if overloaded.

This appliance corresponds to the standards EN 55011 and CISPR 11. It is a Group 2, Class B product.

Group 2 means that microwaves are produced for the purpose of heating food. Class B states that the appliance is suitable for private households.

Environmental protection

Your new appliance is particularly energy-efficient. Here you can find tips on how to save even more energy when using the appliance, and how to dispose of your appliance properly.

Saving energy

- Only preheat the appliance if this is specified in the recipe or in the tables in the operating instructions.
- Leave frozen food to defrost before placing it in the cooking compartment.

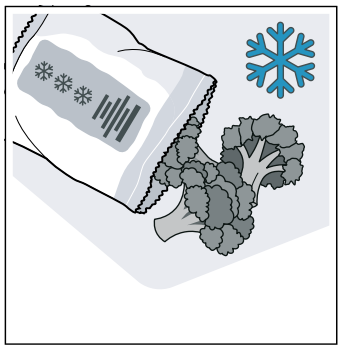

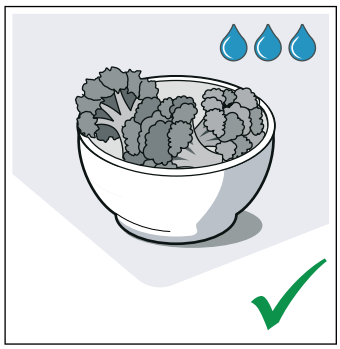

- Use baking tins that are dark-coloured, painted black or have an enamel coating. These absorb the heat particularly well.

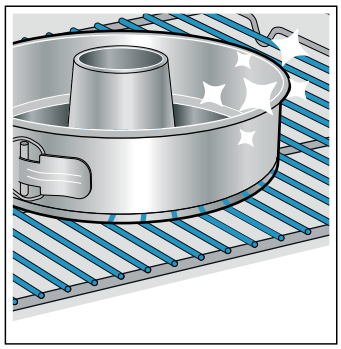

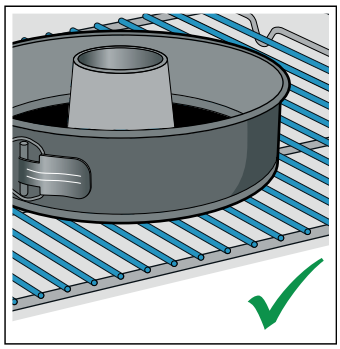

- Remove any unnecessary accessories from the cooking compartment.

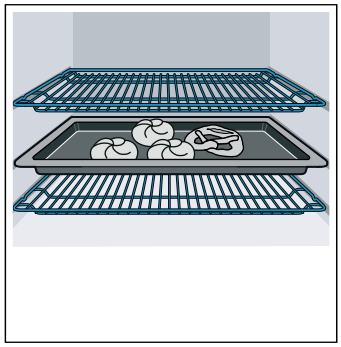

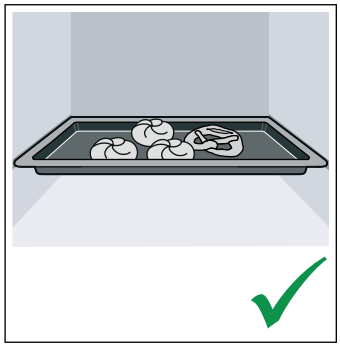

- Open the appliance door as infrequently as possible when the appliance is in use.

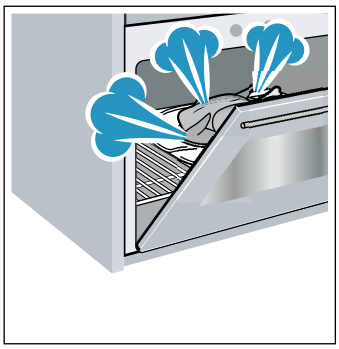

- It is best to bake several cakes one after the other. The cooking compartment stays warm. This reduces the baking time for the second cake. You can place two cake tins next to each other in the cooking compartment.

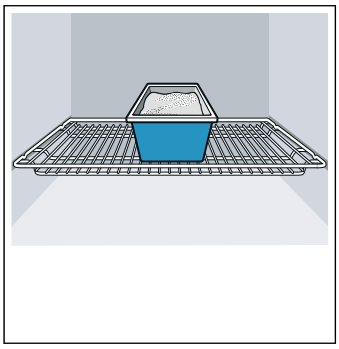

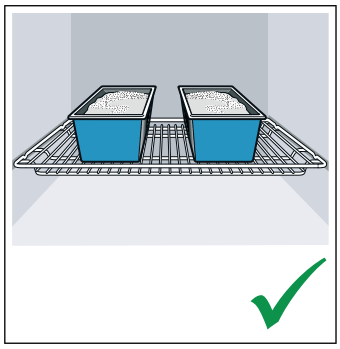

- For longer cooking times, you can switch the appliance off 10 minutes before the end of the cooking time and use the residual heat to finish cooking.

Environmentally-friendly disposal

Dispose of packaging in an environmentally-friendly manner.

This appliance is labelled in accordance with European Directive 2012/19/EU concerning used electrical and electronic appliances (waste electrical and electronic equipment - WEEE). The guideline determines the framework for the return and recycling of used appliances as applicable throughout the EU.

Getting to know your appliance

In this section, we will explain the indicators and controls. You will also find out about the various functions of your appliance.

Note: Depending on the appliance model, individual details and colours may differ.

Control panel

You can set your appliance's various functions on the control panel. The current settings are shown in the display.

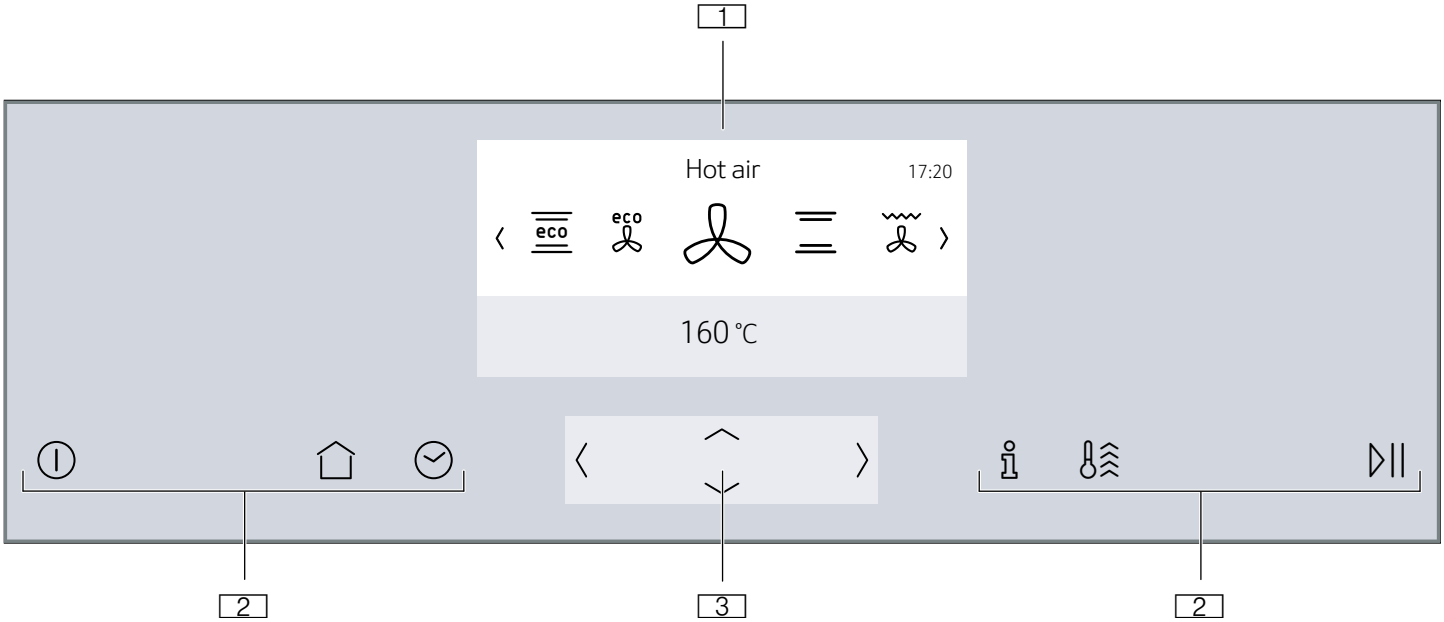

1 Display
2 Touch buttons
3 ShiftControl control element

Controls

Use the controls to set your appliance simply and directly.

Touch buttons

There are sensors under the touch buttons. Touch the corresponding touch button to select a function.

Touch button		Use
	On/off	Switches the appliance on or off⟶ *"Switching the appliance on and off" on page 14*
	Main menu	Selects operating modes and settings ⟶ *"Setting and starting the appliance operation" on page 14*
	Time-setting options	Sets the timer, cooking time or "Finished at" start delay ⟶ *"Time-setting options" on page 16*
	Childproof lock	Activating and deactivating the childproof lock ⟶ *"Childproof lock" on page 17*
	Information	Displays additional information Displays the current temperature ⟶ *"Setting and starting the appliance operation" on page 14*
	Rapid heating	Activating or deactivating the "Rapid heating" function ⟶ *"Heating up the appliance quickly" on page 15*
	Start/stop	Start or pause the appliance ⟶ *"Setting and starting the appliance operation" on page 14*

ShiftControl control element

Use the ShiftControl control element to navigate through the lines on the display and select the settings. Settings that you can change have left and right arrows 〈 〉.

Button		Use
〈	Left	Navigates to the left on the display
〉	Right	Navigates to the right on the display
︿	Up	Navigates upwards on the display
﹀	Down	Navigates downwards on the display

Note: You can also scroll through the settings values quickly by pressing and holding a button. As soon as you release the button, you stop scrolling through the values quickly.

Main menu

Touch the touch button to access the main menu.

Menu	Use
	Types of heating Select the desired heating type and temperature for your food ⟶ *"Switching the appliance on and off" on page 14*

	Microwave You can use the microwave to cook, heat up or defrost your dishes more quickly.⟶ *"Microwave" on page 17*
	Microwave combination You can also use this to switch on a type of heating on the microwave.⟶ *"Microwave" on page 17*
	Baking and roasting assistant Recommended settings for baking and roasting ⟶ *"Baking and roasting assistant" on page 29*
	Microwave programmes You can use these to prepare food using the microwave.⟶ *"Programmes" on page 30*

	MyProfile Individually adjusting the appliance settings ⟶ *"Basic settings" on page 20*
	Home Connect Assistant Connecting your appliance to your mobile device ⟶ *"Basic settings" on page 20*
	Dry Use after every operation with EasyClean or the microwave
	EasyClean Cleaning light soiling from the cooking compartment ⟶ *"Cleaning function" on page 24*

Types of heating menu

Your appliance comes with various types of heating. After switching on the appliance, you are taken directly to the menu for the types of heating.

For temperature settings above 275 °C, the appliance reduces the temperature to approx. 275 °C after approx. 40 minutes.

Type of heating		Temperature	Use
	Hot air	30 - 275 °C	For baking and cooking on one or more levels. The fan distributes the heat from the ring heating element in the back panel evenly around the cooking compartment.
	Top/bottom heating	50–275 °C	For traditional baking and roasting on one level. Especially suitable for cakes with moist toppings. Heat is emitted evenly from above and below.
	Circo-roasting	50–250 °C	For roasting poultry, whole fish and larger pieces of meat. The grill element and the fan switch on and off alternately. The fan circulates the hot air around the food.
	Pizza setting	50–275 °C	For cooking pizza and dishes that require a lot of heat from underneath. The bottom heating element and the ring-shaped heating element in the back wall heat the cooking compartment.
	Grill, large area	50–290 °C	For grilling flat items, such as steaks or sausages, for making toast, and for browning food. The entire area underneath the grill element becomes hot.
	Grill, small area	50–290 °C	For grilling small amounts of steak or sausages, for making toast, and for browning food. The central area under the grill element becomes hot.
	Bottom heating	50–250 °C	For cooking in a bain marie and for baking food for extra time. Heat is emitted from below.
	Slow cooking	70–120 °C	For gentle and slow cooking of seared, tender pieces of meat in ovenware without a lid. Heat is emitted evenly from above and below at low temperatures.
	Dough proving	35–55 °C	For proofing yeast dough and sourdough and for culturing yogurt. Dough proves more quickly than at room temperature. The surface of the dough does not dry out.
	Plate warming	30-70 °C	For preheating ovenware.
eco	Top/bottom heating eco	50–275 °C	For gently cooking selected types of food. Heat is emitted from above and below. This heating function is most effective between 150 and 250 °C. This type of heating is used to measure the energy consumption in the conventional mode.

eco	Hot air eco	30-275 °C	For gently cooking selected types of food on one level without preheating. The fan distributes the heat from the ring-shaped heating element in the back panel around the cooking compartment. This heating function is most effective between 125 and 275 °C. This heating function is used to measure both the energy consumption in air recirculation mode and the energy efficiency class.

Cooking compartment functions

The features of the cooking compartment make your appliance easier to use. This, for example, enables the cooking compartment to be well lit and a cooling fan to prevent the appliance from overheating.

Opening the appliance door

If you open the appliance door while the appliance is in operation, this pauses the programme. The operation continues to run when you close the door.

Interior lighting

When you open the appliance door, the interior lighting switches on. If the door remains open for longer than around 15 minutes, the lighting switches off again.

In most operating modes, the interior lighting will switch on as soon as the appliance is started. Once the program is complete, the lighting switches off.

Note: You can set the interior lighting to not come on during the operation in the basic settings. ⟶ *"Basic settings" on page 20*

Cooling fan

The cooling fan switches on and off as required. The hot air escapes above the door.

Caution!
Do not cover the ventilation slots. Otherwise, the appliance may overheat.

To cool the cooking compartment more quickly after operation, the cooling fan continues to run for a certain period afterwards.

Note: You can change how long the cooling fan continues to run in the basic settings. ⟶ *"Basic settings" on page 20*

Accessories

Your appliance is accompanied by a range of accessories. Here, you can find an overview of the accessories included and information on how to use them correctly.

Accessories included

Your appliance is equipped with the following accessories:

	Wire rack For ovenware, cake tins and ovenproof dishes. For roasts, grilled items and frozen meals. The wire rack is suitable for use in the microwave.
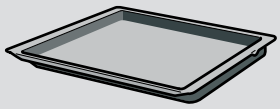	**Universal pan** For moist cakes, pastries, frozen meals and large roasts. It can be used to catch dripping fat when you are grilling directly on the wire rack.

Only use original accessories. They are specially adapted for your appliance.

You can buy accessories from the after-sales service, from specialist retailers or online.

Note: The accessories may deform when they become hot. This does not affect their function. Once they have cooled down again, they regain their original shape.

Microwave

Only the wire rack provided is suitable when using the microwave only. If you use the universal pan or the baking tray, this may create sparks, which may damage the cooking compartment.

When using the appliance in combination with the microwave or "Dishes" mode, you can use the universal pan, baking tray or any other accessories that have been included with the appliance.

Inserting accessories

The cooking compartment has three shelf positions. The shelf positions are counted from the bottom up.

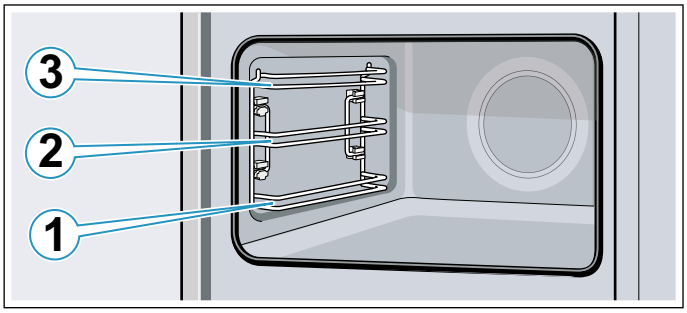

When using positions 1, 2 and 3, always insert the accessory between the two guide rods for a shelf position.

Notes

- Ensure that you always insert the accessories into the cooking compartment the right way round.
- Always insert the accessories fully into the cooking compartment so that they do not touch the appliance door.

Locking function

The accessories can be pulled out approximately halfway until they lock in place. The locking function prevents the accessories from tilting when they are pulled out. The accessories must be inserted into the cooking compartment correctly for the tilt protection to work properly.

When inserting the wire rack, ensure that the lug **a** is at the rear and is facing downwards. The word "microwave" must be at the front and the curvature must be facing downwards ⌣.

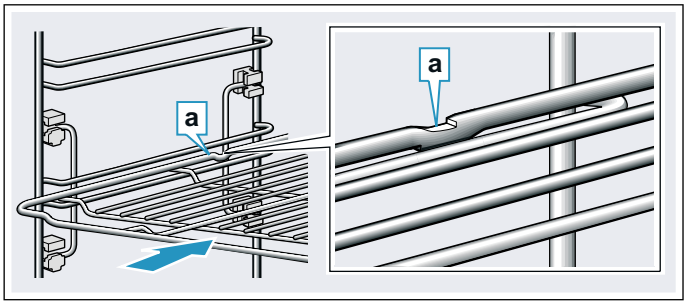

When inserting baking trays, make sure that the recess **a** is at the rear and is facing downwards. The sloping edge of the accessory **b** must be facing towards the appliance door.

Example in the picture: universal pan

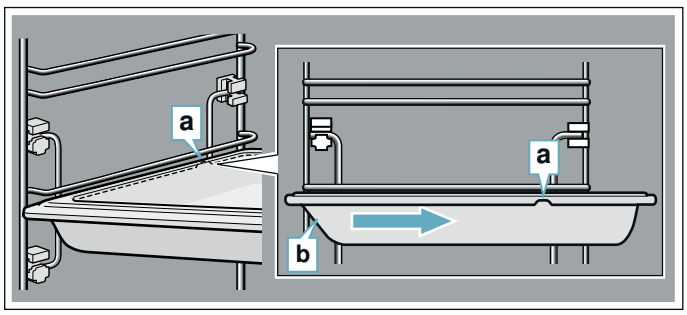

Optional accessories

You can purchase optional accessories from the after-sales service and specialist retailers, or on the Internet. You will find a comprehensive range of products for your appliance in our brochures and on the Internet.

Both availability and whether it is possible to order online differ between countries. Please see your sales documents for more details.

Note: Not all optional accessories are suitable for every appliance. When purchasing, please always quote the exact designation (E no.) of your appliance.
→ *"Customer service" on page 29*

Accessories
Baking and roasting shelf
Baking tray
Universal pan
Baking tray, non-stick
Universal pan, non-stick
Extra-deep pan
Profi pan
Lid for the Profi pan
Pizza tray
Grill tray
Ceramic brick
Glass roasting dish, 5.1 litres
Glass pan
Steaming set for ovens
Decorative strip

Before using for the first time

Before you can use your new appliance, you must make some settings. You must also clean the cooking compartment and accessories.

Initial use

As soon as the appliance is connected to the power supply, the first setting "Language" appears on the display.

Setting the language

1. Use the ⌣ button to navigate to the bottom line.
2. Use the 〈 or 〉 button to select the language.
3. Use the ⌃ button to return to "Language".
4. Use the 〉 button to select the next setting.

Setting the time

1. Use the ⌣ button to navigate to the bottom line.
2. Use the 〈 or 〉 button to select the current hour.

3. Use the ⌣ button to navigate to the next line.
4. Use the 〈 or 〉 button to select the current minute.
5. Press the ⌃ button repeatedly until "Time" appears.
6. Use the 〉 button to select the next setting.

Setting the date

1. Use the ⌣ button to navigate to the bottom line.
2. Use the 〈 or 〉 button to select the current day.
3. Use the ⌣ button to navigate to the next line.
4. Use the 〈 or 〉 button to select the current month.
5. Use the ⌣ button to navigate to the next line.
6. Use the 〈 or 〉 button to select the current year.
7. Press the ⌃ button repeatedly until "Date" appears.
8. Use the 〉 button to apply the settings.
   The initial use is complete.

Notes

- You can change these settings at any time in the basic settings. ⟶ *"Basic settings" on page 20*
- After connecting the appliance to the power or following a power cut, the settings for initial use are shown in the display.

Set up Home Connect

1. Use the ⌣ button to navigate to the bottom line "Set with assistant".
2. Further instructions can be found in section
   ⟶ *"Home Connect" on page 21*

Cleaning the cooking compartment

To eliminate the new-appliance smell, heat up the cooking compartment without anything in it and with the oven door closed.

1. Remove the accessories from the cooking compartment.
2. Remove any leftover packaging, such as polystyrene pellets, from the cooking compartment.
3. Before heating the appliance, wipe the smooth surfaces in the cooking compartment with a soft, damp cloth.
4. Use the ⏻ touch button to switch on the appliance.
5. Set the specified type of heating and temperature, then start the appliance. ⟶ *"Setting and starting the appliance operation" on page 14*

Settings	
Type of heating	⌘
Temperature	Maximum
Cooking time	1 hour

6. Keep the kitchen ventilated while the appliance is heating.
7. Use the ⏻ touch button to switch off the appliance once the specified time has elapsed.
8. Wait for the cooking compartment to cool down.
9. Clean the smooth surfaces with soapy water and a dish cloth.

Cleaning the accessories

Clean the accessories thoroughly using soapy water and a dish cloth or soft brush.

Operating the appliance

You have already learnt about the controls and how they work. Now we will explain how to set your appliance. You will learn about what happens when you switch the appliance on and off, and how to select the operating mode.

Switching the appliance on and off

To switch the appliance on or off, touch the ⏻ touch button.

After the appliance has switched off, the display shows whether the residual heat in the cooking compartment is high or low.

Display	Temperature
Residual heat high	above 120 °C
Residual heat low	between 60 °C und 120 °C

Notes

- Certain indicators and instructions (e.g. about residual heat in the cooking compartment) remain visible on the display even when the appliance is switched off.
- After the appliance has completed an operation, you will hear the cooling fan continuing to run until the cooking compartment is cooled as much as possible.
- Switch off your appliance when you do not need to use it. If no settings are made for a long time, the appliance switches off automatically.

Setting and starting the appliance operation

Example: ⌘ "Hot air" at 170 °C

1. Touch the ⏻ touch button to switch on the appliance.
   You are taken directly to the ⧉ "Types of heating" menu.

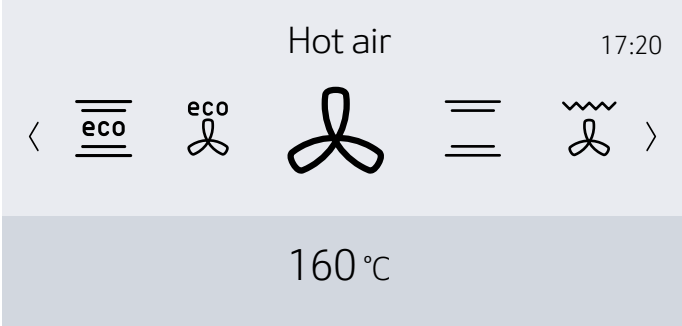

2. Use the 〈 or 〉 button to select the type of heating.
3. Use the ﹀ button to navigate to the next line.
4. Use the 〈 or 〉 button to select the temperature.

Note: Additional settings are available depending on the operating mode. For each further setting, use the ﹀ button to navigate to the next line. Use the 〈 or 〉 button to select the setting.

5. Touch the ▷|| touch button to start the appliance operation.
   The heating bar and run time appear on the display.

Note: If you would like to go directly to the ⌂ main menu after switching on the appliance, you can select the main menu under "Operation after switching on" in the basic settings chapter.

Default values

The appliance suggests a temperature or setting for each type of heating. You can accept this value or change it in the appropriate area.

Heating bar

As soon as a type of heating has started, the heating bar appears on the display.The heating bar shows the temperature increase in the cooking compartment.

Run time

When a type of heating has been started, the run time is displayed. The run time counts upwards during the operation. You can therefore check how long the operation has already been running.

Displaying the current temperature

To show the current temperature on the display, press the ℹ touch button.

The current temperature is shown briefly only when heating up.

Further information

If the ℹ touch button lights up, information can be displayed. Touch the ℹ touch button to do this. The information is displayed for a few seconds.

Changing or cancelling the appliance operation

Changing the appliance operation

1. Use the ▷|| button to stop the operation.
2. Use the ﹀ or ︿ button to navigate to the line for the setting that should be changed.
3. Use the 〈 or 〉 button to change the setting.
4. Use the ▷|| touch button to start the changed operation.

Notes

- The cooling fan may continue to run while an operation is interrupted.
- After a temperature change, the paused running time continues to count. After a change in the type of heating, the running time starts again from zero.

Cancelling the appliance operation

Press and hold the ▷|| touch button until the appliance operation is cancelled.

Note: Operating modes such as the cleaning function cannot be cancelled.

Heating up the appliance quickly

You can reduce the heating time using the Rapid heating function.

Function	Type of heating	Place the food in the cooking compartment
Rapid heating	Hot air	After heating
	Top/bottom heating	

Notes

- When the touch button lights up, rapid heating can be activated.
- Touch the touch button to deactivate the Rapid heating function early.

Activating the "Rapid heating" function

1. Set Hot air and the temperature.
   Note: Set a temperature above 100 °C to allow the appliance to preheat quickly.
2. Touch the ▷|| touch button to start the appliance operation.
3. Touch the touch button to activate the "Rapid heating" function.
   The symbol appears on the display.
4. Once the set temperature has been reached, the "Rapid heating" function switches off automatically. The symbol disappears from the display. Place the food in the cooking compartment.

Time-setting options

Your appliance has different time-setting options.

Time-setting option		Use
🔔	Timer	The timer functions like an egg timer. The appliance does not switch on and off automatically.
|→|	Cooking time	Once the set cooking time has elapsed, the appliance switches off automatically.
→|	Ready at	The appliance switches on automatically, and once the set cooking time has elapsed and the end time has passed, it switches off automatically.

Note: If you have set a time-setting option, the time interval increases if you set a higher value. Example: You can set a cooking time of up to one hour in one-minute increments; for cooking times over one hour, you can set a cooking time in five-minute increments.

Showing and hiding the time-setting options

To show or hide the time-setting options, touch the ◷ touch button.

Note: After a particular length of time, the time-setting options that are shown are automatically hidden. If you have already set a cooking time, it will be applied.

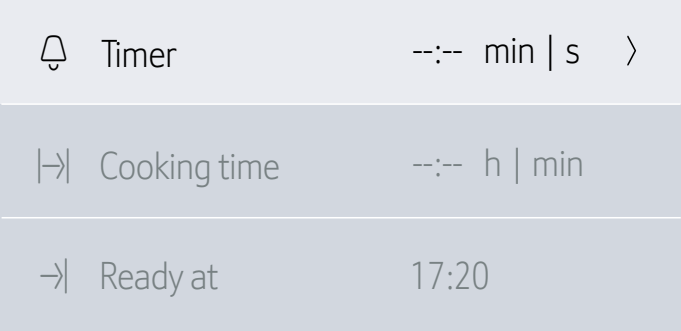

Setting the timer

The timer can be set when the appliance is switched on or off.

1. Touch the ◷ touch button.
   The time-setting options are shown on the display.
2. Select the cooking time using the 〉 button.
   Note: When the appliance is switched on, use the ︿ button to navigate to the Timer 🔔 line and then select the cooking time using the 〉 button.
3. Touch the ◷ touch button to start the timer.
   The 🔔 symbol appears on the display.The timer counts down.

Note: As soon as the set time has elapsed, a signal sounds. To cancel the signal tone, touch the ◷ touch button.

Setting the cooking time

Once the set cooking time has elapsed, the appliance switches off automatically. The function can only be used in combination with a type of heating.

1. Touch the ⏻ touch button.
2. Set the type of heating and temperature.
3. Touch the ◷ touch button.
   The time-setting options are shown in the display.
4. Use the 〈 or 〉 button to set the cooking time.
   – Default value for the 〈 button = 10 minutes
   – Default value for the 〉 button = 30 minutes
5. Touch the ▷|| touch button to start the set cooking time.

As soon as the cooking time has elapsed, an audible signal sounds and the appliance ends the operation automatically. Touch the ◷ touch button to end the audible signal.

Start delay – "Ready at"

The appliance switches on automatically and switches off at the preset end time.To do this, set the cooking time and determine the end time for the operation.

The start delay can only be used in combination with a type of heating.

Notes

- Ensure that food is not left in the cooking compartment for too long as it may spoil.
- It is not possible to start every type of heating with a start delay.

1. Slide food into the cooking compartment on a suitable accessory and close the appliance door.
2. Touch the ⏻ touch button.
3. Set the type of heating and temperature.
4. Touch the ◷ touch button.
   The time-setting options are shown on the display.
5. Select the cooking time using the 〉 button.
6. Use the ︾ button to navigate to the "→| Ready at" line.
7. Select the end time using the 〉 button.
8. Touch the ▷|| touch button.
   The appliance waits until the appropriate time to start the operation.

As soon as the end time has passed, a signal sounds and the appliance stops the operation automatically. To cancel the signal tone, touch the ◷ touch button.

Checking, changing or deleting settings

1. Touch the ◷ touch button.
   The time-setting options are shown on the display.
2. Use the ︾ or ︿ button to navigate through the lines.
3. If necessary, change the setting using the 〈 or 〉 button. Set "00:00" to delete a time function.
   The setting is applied automatically.

Childproof lock

Your appliance is equipped with a childproof lock so that children cannot switch it on accidentally or change any settings.

Your appliance has two different locks.

Lock	Activate/deactivate
Automatic childproof lock	Via the MyProfile menu ⟶ *"Basic settings" on page 20*
One-time childproof lock	Via the ◷ touch button

Note: As soon as you activate the childproof lock, the control panel is locked. The ◷ and ⏻ touch buttons are not included.You can deactivate the childproof lock at any time.

Automatic childproof lock

The control panel is locked so that the appliance cannot be switched on. To switch it on, the automatic childproof lock must be interrupted. After the appliance operation, the control panel is locked automatically.

Activating

1. Touch the ⏻ touch button.
2. Touch the ⌂ touch button.
3. Use the 〈 or 〉 button to select "MyProfile".
4. Use the ⌄ button to navigate to the next line.
5. Use the 〈 or 〉 button to select "Automatic childproof lock".
6. Use the ⌄ button to navigate to the bottom line.
7. Use the 〉 button to select "Activated".
8. Touch the ⌂ touch button.
9. Use the ⌄ button to navigate to the next line to save the setting.
   The "Automatic childproof lock" is activated. The ⊸ symbol appears on the display after switching off the appliance.

Cancelling

1. Press and hold the ◷ touch button until "Childproof lock deactivated" appears on the display.
2. Touch the ⏻ touch button.
3. Switch on the required appliance operation.

Deactivating

1. Press and hold the ◷ touch button until "Childproof lock deactivated" appears on the display.
2. Touch the ⏻ touch button.
3. Touch the ⌂ touch button.
4. Use the 〈 or 〉 button to select "MyProfile".
5. Use the ⌄ button to navigate to the next line.
6. Use the 〈 or 〉 button to select "Automatic childproof lock".
7. Use the ⌄ button to navigate to the bottom line.
8. Use the 〈 button to select "Deactivated".
9. Touch the ⌂ touch button.
10. Use the ⌄ button to navigate to the next line to save the setting.
    The "Automatic childproof lock" is deactivated.
11. Touch the ⏻ touch button.

One-time childproof lock

The control panel is locked so that the appliance cannot be switched on. To switch it on, the one-time childproof lock must be deactivated. After the appliance is switched off, the control panel is no longer locked.

Activating and deactivating

1. Press and hold the ◷ touch button until "Childproof lock activated" appears on the display.
   The childproof lock is activated.
2. Press and hold the ◷ touch button until "Childproof lock deactivated" appears on the display.
   The childproof lock is deactivated.

Microwave

You can use the microwave to cook, heat up or defrost food quickly. The microwave can be used on its own, or in combination with a type of heating.

To ensure optimum use of the microwave, please observe the notes on cookware and familiarise yourself with the data in the application tables at the end of the instruction manual.

Cookware

Not all cookware is suitable for microwaves. To ensure that your food is heated and the appliance is not damaged, only use cookware that is suitable for microwaves.

Heat-resistant cookware made of glass, glass ceramic, porcelain or heat-resistant plastic is suitable. These materials allow microwaves to pass through. You can also use ceramic if it has been fully glazed and has no cracks.

You can also use serving dishes. This saves you having to transfer food from one dish to another. You should only use cookware with decorative gold or silver trim if the manufacturer guarantees that they are suitable for use in microwaves.

To bake in combined operation, you can use ordinary metal baking tins. This means that the cake is also browned from below.
Metal dishes are not suitable for other applications. Metal does not allow microwaves to pass through. Food in covered metal containers will remain cold.

Caution!
Creation of sparks: Metal (e.g. a spoon in a glass) must be kept at least 2 cm from the cooking compartment walls and the inside of the door. Sparks may irreparably damage the glass on the inside of the door.

Cookware test

Never switch on the microwave unless there is food inside. The short cookware test is the only exception to this rule.

Perform the following test if you are unsure whether your cookware is suitable for use in the microwave.

1. Heat the empty cookware at maximum power for ½ to 1 minute.
2. Check the temperature of the cookware during this time.

The cookware should remain cold or warm to the touch.

The cookware is unsuitable if it becomes hot or sparks are generated.
In this case, stop the test.

⚠ Warning – Risk of burns!
The accessible parts become very hot when in operation. Never touch hot parts. Keep children at a safe distance.

Accessories included

Only the wire rack provided is suitable when using the microwave only. If you use the universal pan or the baking tray, this may create sparks, which may damage the cooking compartment.

When using the appliance in combination with the microwave or "Dishes" mode, you can use the universal pan, baking tray or any other accessories that have been included with the appliance.

When using the microwave, it is best to insert accessories at level 1, unless otherwise specified.

Microwave power settings

A variety of microwave power settings that are suitable for different types of food and food preparation are available.

A cooking time must always be set to operate the microwave. You can either apply the default cooking time or adjust it in the relevant menu.

Power settings	Food	Maximum cooking time
90 W	For defrosting delicate foods	1 hr 30 mins
180 W	For defrosting and continued cooking	1 hr 30 mins
360 W	For cooking meat and heating delicate foods	1 hr 30 mins
600 W	For heating and cooking food	1 hr 30 mins
max.	For heating liquids	30 mins

The maximum setting is designed for heating liquids only; it is not designed for heating food. To protect the appliance, the maximum power of the microwave is gradually reduced to 600 W during the first few minutes. Full power is made available again after a cooling period.

Setting the microwave

To achieve optimum results with the microwave, always insert the wire rack at shelf position 1.

Note: If you use the microwave function very regularly, you can change the "Operation after switch-on" option in the microwave's basic settings.

1. Touch the ⏻ touch button to switch on the appliance.
2. Touch the ⌂ touch button.
   The main menu appears.
3. Use the 〈 or 〉 button to select "Microwave ≋".
4. Use the ⌣ button to open the microwave menu.
   A microwave output setting and cooking time are suggested.
5. Use the 〈 or 〉 button to set the required microwave output setting.
6. Use the ⌣ button to navigate to the next line.
7. Use the 〈 or 〉 button to set the required cooking time.
8. Touch the ▷|| touch button to start the appliance operation.
   The ▷|| touch button lights up red. The cooking time counts down on the display.

To prevent condensation from forming when the appliance is in microwave only mode, the appliance will automatically switch on an additional heating element when it is set to 600 W or "Max.". The cooking compartment and the accessories will become hot. The cooking result is not affected by this.

Note: You can switch this function off in the basic settings. → *"Basic settings" on page 20*

⚠ Warning – Risk of burns!
At the highest settings in microwave only mode, the drying function will automatically switch on an additional heating element to heat the cooking compartment. Never touch the inside surfaces of the cooking compartment or the heating elements while they are hot. Keep children at a safe distance.

Changing the cooking time

You can change the cooking time at any time during operation by touching the 〈 or 〉 touch button.

Changing the microwave output setting

1. Touch the ▷|| touch button and reset the microwave output setting and cooking time.
2. Touch the ▷|| touch button to start the appliance operation.

The cooking time has elapsed

As soon as the end time has been reached, an audible signal sounds and the appliance ends the microwave operation automatically.
"|→| Finished" appears on the display.

Touch the ◷ touch button to stop the audible signal.

If you want to set a new cooking time, touch the ▷|| touch button.

Otherwise, touch the ⏻ touch button to switch off the appliance.

Pausing the operation

Touch the ▷|| touch button to pause the oven. Press the ▷|| touch button again to continue the operation.

Opening the appliance door interrupts the operation. Touch the ▷|| touch button once the door has been closed. The operation continues.

Note: If you have altered the basic setting, make sure that the microwave does not resume operation without food inside. → *Page 20*

⚠ Warning – Risk of burns!
The accessible parts become very hot when in operation. Never touch hot parts. Keep children at a safe distance.

Cancelling the operation

Touch the ⏻ touch button.

Starting drying

To dry the cooking compartment, it is heated up so that the moisture in the cooking compartment evaporates. You will then need to open the appliance door to allow the steam to escape from the cooking compartment.

Caution!
Enamel damage: Do not start any operations when there is water on the cooking compartment floor. Before operation, wipe away the water from the cooking compartment floor.

1. Leave the appliance to cool down.
2. Remove the worst dirt from the cooking compartment immediately and wipe away moisture from the cooking compartment floor.
3. If necessary, touch the ⏻ touch button to switch the appliance on.
4. Touch the ⌂ touch button to display the operating modes.
5. Use the 〈 or 〉 button to select "Drying ⌇⌇⌇".
6. Use the ⌄ button to navigate to the next line.
   The duration is displayed. It cannot be changed.
7. Use the ⌄ button to navigate to the next line.
8. Touch the ▷|| touch button.
   The drying function is started and is ended automatically after 10 minutes.
9. Open the appliance door and leave it open for 1 to 2 minutes so that the moisture in the cooking compartment can escape.

Setting the microwave to combi-mode

Several types of heating are suitable for combining with the microwave. The microwave output setting can be set to 90 W, 180 W or 360 W.

Types of heating available:

	Hot air
	Top/bottom heating
	Circo-roasting
	Grill, large area
	Grill, small area

1. Touch the ⏻ touch button to switch on the appliance.
2. Touch the ⌂ touch button.
   The main menu appears.
3. Use the 〈 or 〉 button to select "Microwave combination operation ".
4. Touch the ⌄ touch button.
   The "Hot air" default value is shown on the display.
5. Use the 〈 or 〉 touch button to set the required type of heating.
6. Use the ⌄ button to navigate to the next line.
   Set the desired temperature using the 〈 or 〉 button.
7. Use the ⌄ button to navigate to the next line.
   Use the 〈 or 〉 button to set the required microwave output setting.
8. Use the ⌄ button to navigate to the next line.
   Use the 〈 or 〉 button to set the required cooking time.
9. Touch the ▷|| touch button.
   The appliance starts the operation. The cooking time counts down on the display.

You can change the temperature, microwave output setting and cooking time at any time. To do this, use the ⌃ or ⌄ button to navigate to the required field, and set the value you want using the 〈 or 〉 button.

The cooking time has elapsed

As soon as the end time has been reached, an audible signal sounds and the appliance ends the microwave operation automatically.
"|→| Finished" appears on the display.

Touch the ◷ touch button to stop the audible signal.

If you want to set a new cooking time, touch the ▷|| touch button.

Otherwise, touch the ⏻ touch button to switch off the appliance.

Pausing the operation

Touch the ▷|| touch button to pause the oven. Press the ▷|| touch button again to continue the operation.

Opening the appliance door interrupts the operation. The operation continues to run automatically when the door is closed.

Cancelling the operation

Touch the ⏻ touch button.

Basic settings

There are various settings available to you in order to help use your appliance effectively and simply. If necessary, you can change these settings in MyProfile.

Changing MyProfile

1. Touch the touch button.
2. Touch the touch button.
3. Use the 〈 or 〉 button to select "MyProfile".
4. Use the button to navigate to the next line.
5. Use the 〈 or 〉 button to select the setting.
6. Use the button to navigate to the selection.
7. Use the 〈 or 〉 button to select the setting.
8. Touch the touch button.
9. To save the setting, use the button to select "Save".
   To discard the setting, use the button to select "Discard".

List of basic settings

Setting	Selection
Language	Select language
Time of day	Sets the current time
Date	Sets the current date
Favourites	Set the heating types that should be shown in the heating types menu → *"Setting favourites" on page 20*
Audible signal	Short duration
	Medium duration
	Long duration
Button tone	Switched off (Exception: The button tone for the touch button remains switched on)
	Switched on
Display brightness	Adjustable across 5 levels
Clock display	Digital
	Off
Lighting	On during operation
	Off during operation
Childproof lock*	Only key lock
	Door lock and key lock
Automatic continuation	When you close the door.
	Does not continue.
Automatic childproof lock	Deactivated
	Activated
Operation after switch-on	Main menu
	Types of heating
	Microwave
	Microwave combined operation
	Baking/roasting assistant
	Microwave programmes
Night-time dimming	Switched off
	Switched on (display dimmed between 10 p.m. and 5.59 a.m.)
Warning: Baking tray in MW	Display
	Do not display
Brand name logo	Display
	Do not display
Dry microwave	On
	Off
Fan run-on time	Recommended
	Minimum
Home Connect	Switching WiFi on or off → *"Home Connect" on page 21*
	Establishing a connection via Home Connect
Factory settings	Restore

*) Depending on the appliance model, this basic setting cannot be selected

Setting favourites

You can set which heating types are shown in the heating types menu.

Note: The "Hot air", "Roasting" and "Grill, large area" heating types are always shown in the heating types menu. They cannot be deactivated.

1. Touch the touch button.
2. Touch the touch button.
3. Use the 〈 or 〉 button to select "MyProfile".
4. Use the button to navigate to the next line.
5. Use the 〈 or 〉 button to select "Favourites".
6. Use the button to select "Setting favourites".
7. Use the 〈 or 〉 button to select the heating type.
8. Use the button to navigate to the next line.
9. Use the 〈 or 〉 button to select "Activated" or "Deactivated".
   Note: If you have selected "Activated", the heating type is shown in the heating types menu. If you have selected "Deactivated", the heating type is not shown in the heating types menu.
10. Touch the touch button.
11. To save the setting, use the button to select "Save".
    To discard the setting, use the button to select "Discard".

Sabbath mode

You can set a time of up to 74 hours using Sabbath mode. The food in the cooking compartment remains warm, without you having to switch the appliance on or off.

Starting Sabbath mode

Before you can use Sabbath mode, you must activate it under "Favourites" in the basic settings. ⟶ *"Setting favourites" on page 20*

Once the Sabbath mode has been activated, you can select it under the menu for the types of heating.

The appliance heats up with top/bottom heating.The temperature can be set between 85 °C and 140 °C.

1. Touch the ⏻ touch button.
2. Use the 〈 or 〉 button to select "Sabbath mode".
3. Use the ⌣ button to navigate to the next line.
4. Use the 〈 or 〉 button to select the temperature.
5. Use the ⌣ button to navigate to the next line.
6. Use the 〈 or 〉 button to select the cooking time.
7. Touch the ▷|| touch button.
   The appliance starts the operation.

Note: Once Sabbath mode has started, you can no longer change any settings or cancel the operation using the ▷|| touch button.

Once the Sabbath mode duration has elapsed, a signal sounds. The appliance stops heating. Use the ⏻ touch button to switch off the appliance.

Cancelling Sabbath mode

Touch the ⏻ touch button to cancel Sabbath mode.

Home Connect

This appliance is Wi-Fi-capable and can be remotely controlled using a mobile device.

If the appliance is not connected to the home network, the appliance functions in the same way as an oven with no network connection and can still be operated via the display.

The availability of the Home Connect function depends on the availability of Home Connect services in your country. Home Connect services are not available in every country. You can find more information on this at www.home-connect.com.

Notes

- Ensure that you follow the safety instructions in this instruction manual and that you comply with these even when you are away from home and are operating the appliance via the Home Connect app. You must also follow the instructions in the Home Connect app.⟶ *"Important safety information" on page 5*
- Operating the appliance directly from the appliance always has priority. During this time, it is not possible to operate the appliance using the Home Connect app.

Setting up

To set up Home Connect for your appliance, you require the following:

- Your appliance, connected to the power supply and switched on,
- A smartphone or tablet with a current version of the iOS or Android operating system,
- And your appliance within range of your home network's Wi-Fi signal.

1. Download the Home Connect app.

Download on the App Store | GET IT ON Google Play

2. Open the Home Connect app and scan the QR code.
3. Follow the instructions in the Home Connect app.

Remote Start

In order to start and operate your appliance via the Home Connect app, you must activate remote start. If remote start has been deactivated, you can only display the operating statuses in the Home Connect app and implement appliance settings.

Note: Some of the operating modes can only be started on the oven.

Remote start is automatically deactivated:
- if you open the oven door 15 minutes after remote start has been activated.
- if you open the oven door 15 minutes after the end of operation.

When you start the oven using the controls on the appliance itself, remote start is automatically activated. You can now make changes or start a new programme from your mobile device.

Activating remote start

1. Touch the ⏻ touch button to switch on the appliance.
2. Touch the ⌂ touch button.
   The main menu appears.
3. Use the 〈 or 〉 button to select "Remote start" .
4. Press the ⌣ button to activate remote start.
   appears in the display.

Home Connect settings

You can adjust Home Connect to suit your requirements at any time.

Note: You will find the Home Connect settings in your appliance's basic settings. Which settings the display shows will depend on whether Home Connect has been set up and whether the appliance is connected to your home network.

Basic setting	Possible settings	Explanation
WiFi	Switching on/off	You can switch the wireless module on and off. If WiFi is activated, you can use the Home Connect function. The appliance requires max. 2 W in networked standby.
Network	Connecting to the network/ disconnecting from the network	Switch the network connection on or off as required (e.g. for holiday). Network information is retained after the appliance is switched off. After switching on the appliance, wait for a few seconds while it reconnects to the network.
Connect to app		Start the connection process between the app and the appliance.
Remote control	on/off	Use the Home Connect app to access the appliance's functions. When it is deactivated, only the operating statuses are displayed in the app.
Appliance information		The display shows the network and appliance information.

Remote diagnostics

Customer Service can use Remote Diagnostics to access your appliance if you contact them, have your appliance connected to the Home Connect server and if Remote Diagnostics is available in the country in which you are using the appliance.

Note: For further information and details about the availability of Remote Diagnostics in your country, please visit the service/support section of your local website: www.home-connect.com

About data protection

When your appliance is connected for the first time to a WLAN network, which is connected to the Internet, your appliance transmits the following categories of data to the Home Connect server (initial registration):

- Unique appliance identification (consisting of appliance codes as well as the MAC address of the installed WiFi communication module).
- Security certificate of the WiFi communication module (to ensure a secure IT connection).
- The current software and hardware version of your domestic appliance.
- Status of any previous resetting to factory settings.

This initial registration prepares the Home Connect functions for use and is only required when you want to use these Home Connect functions for the first time.

Note: Ensure that the Home Connect functions can be used only in conjunction with the Home Connect app.

Information on data protection can be accessed in the Home Connect app.

Declaration of Conformity

Constructa Neff Vertriebs-GmbH hereby declares that the appliance with functionality meets the basic requirements and other relevant provisions of Directive 2014/53/EU.

A detailed RED Declaration of Conformity can be found online at www.neff-international.com among the additional documents on the product page for your appliance.

CE

2.4 GHz band: max. 100 mW
5 GHz band: max. 100 mW

BE	BG	CZ	DK	DE	EE	IE	EL
ES	FR	HR	IT	CY	LV	LT	LU
HU	MT	NL	AT	PL	PT	RO	SI
SK	FI	SE	UK	NO	CH	TR	

5 GHz Wi-Fi: for indoor use only

Cleaning agent

With good care and cleaning, your appliance will retain its appearance and remain fully functioning for a long time to come. We will explain here how you should correctly care for and clean your appliance.

Suitable cleaning agents

To ensure that the different surfaces are not damaged by using the wrong cleaning agent, observe the information in the table. Depending on the appliance model, not all of the areas listed may be on/in your appliance.

Caution!
Risk of surface damage
Do not use:
- Harsh or abrasive cleaning agents,
- Cleaning agents with a high alcohol content,
- Hard scouring pads or cleaning sponges,
- High-pressure cleaners or steam cleaners,
- Special cleaners for cleaning the appliance while it is hot.

Wash new sponge cloths thoroughly before use.

Tip: Highly recommended cleaning and care products can be purchased through the after-sales service. Observe the respective manufacturer's instructions.

⚠ Warning – Risk of burns!
The appliance becomes very hot. Never touch the interior surfaces of the cooking compartment or the heating elements. Always allow the appliance to cool down. Keep children at a safe distance.

Area	Cleaning
Appliance exterior	
Stainless steel front	Hot soapy water: Clean with a dish cloth and then dry with a soft cloth. Remove flecks of limescale, grease, starch and albumin (e.g. egg white) immediately. Corrosion can form under such flecks. Special stainless steel cleaning products suitable for hot surfaces are available from our after-sales service or from specialist retailers. Apply a very thin layer of the cleaning product with a soft cloth.
Plastic	Hot soapy water: Clean with a dish cloth and then dry with a soft cloth. Do not use glass cleaner or a glass scraper.
Painted surfaces	Hot soapy water: Clean with a dish cloth and then dry with a soft cloth.
Control panel	Hot soapy water: Clean with a dish cloth and then dry with a soft cloth. Do not use glass cleaner or a glass scraper.
Door panels	Hot soapy water: Clean with a dish cloth and then dry with a soft cloth. Do not use a glass scraper or a stainless steel scouring pad.
Door handle	Hot soapy water: Clean with a dish cloth and then dry with a soft cloth. If descaler comes into contact with the door handle, wipe it off immediately. Otherwise, any stains will not be able to be removed.
Appliance interior	
Enamel surfaces and self-cleaning surfaces	Observe the instructions for the surfaces of the cooking compartment that follow the table.
Glass cover for the interior lighting	Hot soapy water: Clean with a dish cloth and then dry with a soft cloth. If the cooking compartment is heavily soiled, use oven cleaner.
Door seal Do not remove.	Hot soapy water: Clean with a dish cloth. Do not scour.
Door cover	made from stainless steel: Use stainless steel cleaner. Follow the manufacturers' instructions. Do not use stainless steel care products. made from plastic: Clean using hot soapy water and a dish cloth. Dry with a soft cloth. Do not use glass cleaner or a glass scraper. Remove the door cover for cleaning.
Stainless steel interior door frame	Stainless steel cleaner: Observe the manufacturer's instructions. This can be used to remove discolouration. Do not use stainless steel care products.
Rails	Hot soapy water: Soak and clean with a dish cloth or brush.
Pull-out system	Hot soapy water: Clean with a dish cloth or a brush. Do not remove the lubricant while the pull-out rails are pulled out – it is best to clean them when they are pushed in. Do not clean in the dishwasher.
Accessories	Hot soapy water: Soak and clean using a dishcloth or brush. If there are heavy deposits of dirt, use a stainless steel scouring pad. Enamelled accessories are dishwasher-safe.

Notes
- Slight differences in colour on the front of the appliance are caused by the use of different materials, such as glass, plastic and metal.
- Shadows on the door panels, which look like streaks, are caused by reflections made by the interior lighting.

- Enamel is baked on at very high temperatures.This can cause some slight colour variation. This is normal and does not affect operation.
  The edges of thin trays cannot be completely enamelled. As a result, these edges can be rough. This does not impair the anti-corrosion protection.

Surfaces in the cooking compartment

The back wall in the cooking compartment is self-cleaning.You can tell this from the rough surface.

The base, ceiling and side panel are enamelled and have smooth surfaces.

Cleaning enamel surfaces

Clean the smooth enamel surfaces with a dish cloth and hot soapy water or a vinegar solution. Then dry them with a soft cloth.

Soften baked-on food remnants with a damp cloth and soapy water. Use stainless steel wire wool or oven cleaner to remove stubborn dirt.

Caution!
Never use oven cleaner in the cooking compartment when it is still warm. This may damage the enamel. Remove all food remnants from the cooking compartment and the appliance door before you next heat up the appliance.

Leave the cooking compartment open to dry after cleaning it.

Tip: It is best to use the cleaning aid. ⟶ *"Cleaning function" on page 24*

Note: Food residues can cause white deposits to form. These are harmless and do not affect how the appliance works. You can remove these residues using lemon juice if required.

Cleaning self-cleaning surfaces

The self-cleaning surfaces are coated with a porous, matte ceramic layer. This coating absorbs and dispels splashes from baking and roasting while the appliance is in operation.

If the self-cleaning surfaces no longer clean themselves sufficiently and dark stains appear, they can be cleaned using targeted heating.

Making settings

Remove the rails, pull-out shelves, accessories and ovenware from the cooking compartment beforehand. Thoroughly clean the smooth enamel surfaces in the cooking compartment, the inside of the appliance door and the glass cover on the interior lighting.

1. Set the hot air type of heating.
2. Set the maximum temperature.
3. Start the mode and leave it to run for at least one hour.

The ceramic coating is regenerated.

When the cooking compartment has cooled down, remove the brown or white residue with water and a soft sponge.

Note: During operation, reddish spots form on the surfaces. This is not rust, but residues from food. These spots are not harmful and do not restrict the cleaning ability of the self-cleaning surfaces.

Caution!
Do not use oven cleaner on the self-cleaning surfaces. This will damage the surfaces.If oven cleaner does get onto these surfaces, dab it off immediately using water and a sponge cloth. Do not rub the surface and do not use abrasive cleaning aids.

Keeping the appliance clean

Always keep the appliance clean and remove dirt immediately so that stubborn deposits of dirt do not build up.

⚠ Warning – Risk of fire!
Loose food remnants, fat and meat juices may catch fire. Before using the appliance, remove the worst of the food remnants from the cooking compartment, heating elements and accessories.

Tips
- Clean the cooking compartment after each use. This will ensure that dirt cannot be baked on.
- Always remove flecks of limescale, grease, starch and albumin (e.g. egg white) immediately.
- Use the universal pan for baking very moist cakes.
- Use suitable ovenware for roasting, e.g. a roasting dish.

Cleaning function

The EasyClean cleaning aid makes it easier to clean the cooking compartment. Dirt is softened beforehand by vaporizing soapy water. It can then be removed more easily.

⚠ Warning – Risk of scalding!
Water in a hot cooking compartment may create hot steam. Never pour water into the cooking compartment when the cooking compartment is hot.

Starting

Notes
- The "EasyClean" cleaning aid can only be started once the cooking compartment is cold (room temperature) and the appliance door is closed.
- Do not open the appliance door during operation. Doing this will interrupt the "EasyClean" cleaning aid.

1. Remove the accessories from the cooking compartment.
2. Mix 0.4 litres of water (not distilled water) with a drop of washing-up liquid and pour into the middle of the cooking compartment floor.
3. Touch the touch button.
4. Touch the touch button.

5. Use the 〈 or 〉 button to select "EasyClean ".
6. Use the ⌣ button to navigate to the next line.
7. Touch the ▷|| touch button.
   The appliance starts EasyClean. The remaining time appears on the display.

End

As soon as the cleaning aid has run through, a signal sounds and the appliance ends the operation automatically.

As soon as you open the appliance door, the interior lighting is switched on so that you can rinse the cooking compartment more easily. The remaining water in the cooking compartment must be removed promptly. Do not leave the remaining water in the cooking compartment for a long time (e.g. overnight). The appliance must not be operated when the cooking compartment is still wet or damp.

Subsequent cleaning

1. Open the appliance door and remove the remaining water with an absorbent sponge cloth.
2. Clean the smooth surfaces in the cooking compartment with a dish cloth or a soft brush. Stubborn residues can be removed using a stainless steel scouring pad.
3. Remove limescale with a cloth soaked in vinegar. Then wipe with clean water and rub dry with a soft cloth (including under the door seal).
4. Use the ⏻ touch button to switch off the appliance.
5. Leave the appliance door ajar in the stop position (approx. 30°) for approx. one hour to allow the enamel surfaces in the cooking compartment to dry thoroughly.

Removing heavy deposits of dirt

You have several options for removing particularly stubborn deposits of dirt.

- Leave the soapy water to work for some time before starting the cleaning aid.
- Rub soapy water onto the dirt on the smooth surfaces before starting the cleaning aid.
- Repeat the cleaning aid after the cooking compartment has cooled down.

Rails

With good care and cleaning, your appliance will retain its appearance and remain fully functional for a long time to come. This will tell you how to remove the shelves and clean them.

Detaching and refitting the rails

⚠ Warning – Risk of burns!
The rails become very hot. Never touch the hot rails. Always allow the appliance to cool down. Keep children away from the appliance.

Detaching the rails

1. Push the rail to the front and up (fig. 1)
2. and detach it (fig. 2).

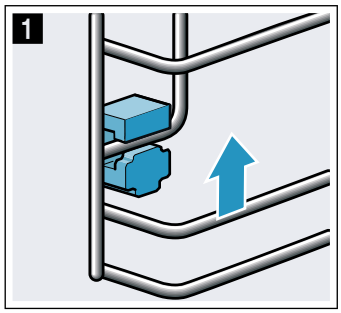

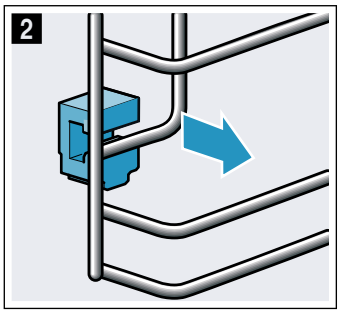

3. Then swing the entire rail outwards **a** and detach it at the rear **b** (fig. 3).

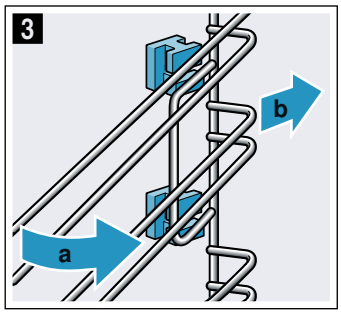

Clean the rails with cleaning agent and a sponge. For stubborn deposits of dirt, use a brush.

Inserting the holders

If the holders fall out when you remove the rails, these must be re-inserted.

1. The holders at the front differ from those at the rear (fig. 1).
2. Use the hook to mount the front holder at the top into the round hole **a**, set it at a slight incline, attach it at the bottom, and straighten it **b** (fig. 2).

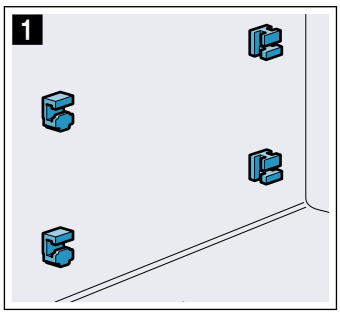
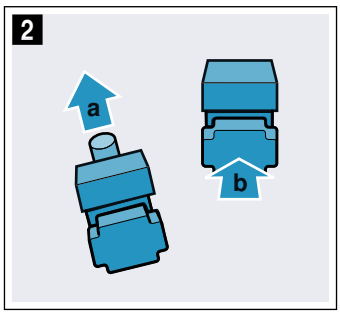

3. Use the hook to attach the rear holder into the upper hole **a** and push it into the lower hole **b** (fig. 3).

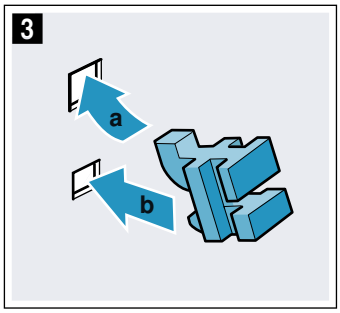

Attaching the rails

When hanging the rails, ensure that the sloping edge is at the top of the rail.

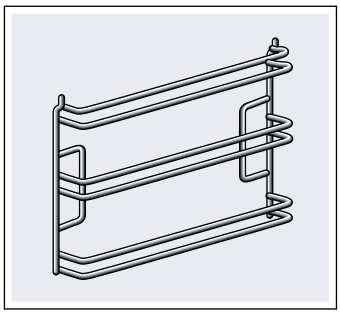

The rails fit both the left and right sides.

1. Hold the rear of the frame at an angle, and mount it at the top and bottom **a** (fig. 1).
2. Pull the rail forwards (fig. 2).

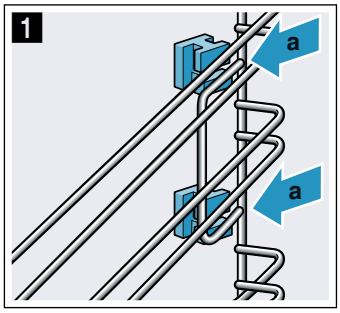

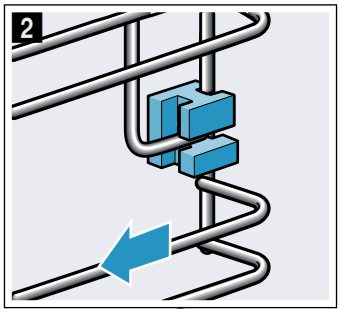

3. Then fold it forwards and insert it (fig. 3)
4. and push it downwards (fig. 4).

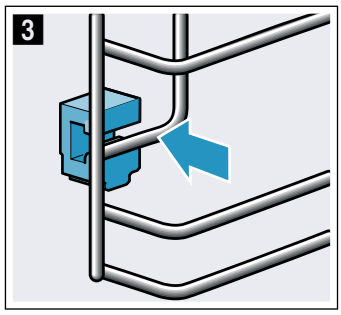
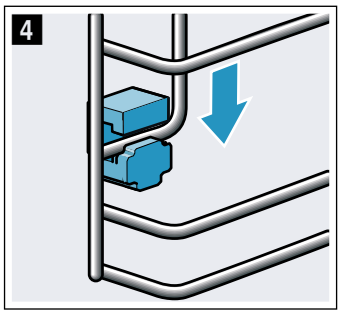

Appliance door

With good care and cleaning, your appliance will retain its appearance and remain fully functional for a long time to come. This will tell you how to clean the appliance door.

Removing the door cover

The stainless-steel inlay in the door cover may become discoloured. To carry out thorough cleaning, you can remove the cover.

1. Open the appliance door slightly.
2. Press on the right and left side of the cover (fig. 1).
3. Remove the cover (fig. 2).
   Close the appliance door carefully

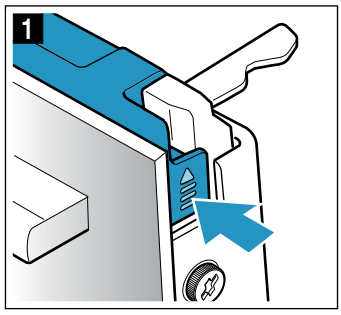
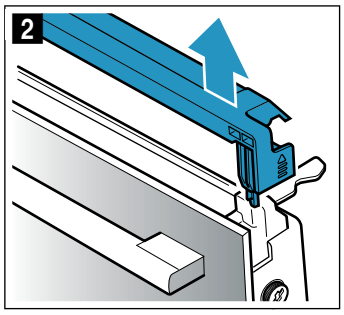

Note: Clean the stainless-steel inlay in the cover with a stainless-steel cleaning agent. Clean the rest of the door cover with soapy water and a soft cloth.

4. Open the appliance door again slightly. Put the cover back in place and press on it until it clicks audibly into place (fig. 3).

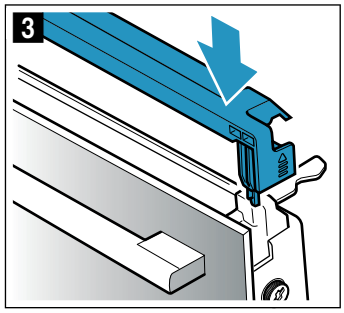

5. Close the appliance door.

Removing and fitting the door panels

To facilitate cleaning, you can remove the glass panels from the appliance door.

⚠ Warning
Risk of injury!

- Scratched glass in the appliance door may develop into a crack. Do not use a glass scraper, sharp or abrasive cleaning aids or detergents.
- The hinges on the appliance door move when opening and closing the door, and you may be trapped. Keep your hands away from the hinges.
- Components inside the appliance door may have sharp edges. Wear protective gloves.

Removing the door panels from the appliance

1. Open the appliance door slightly.
2. Press on the right and left side of the cover (fig. 1).
3. Remove the cover (fig. 2).

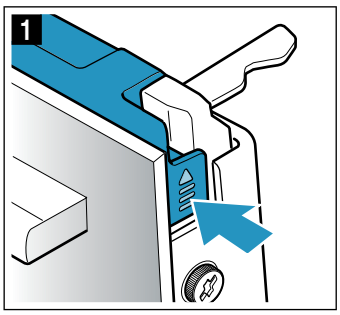

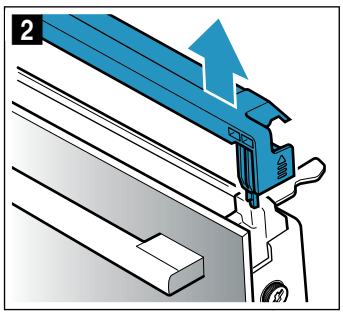

4. Undo and remove the screws on the left and right of the appliance door (fig. 3).
5. Before closing the door again, trap a tea towel that has been folded several times in the door (fig. 4). Pull out the front panel upwards and lay it on a flat surface with the door handle facing downwards.

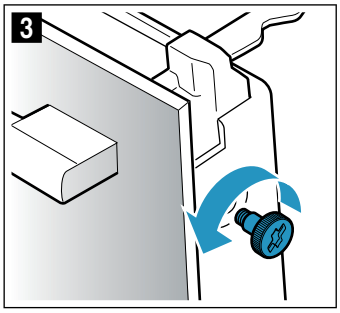

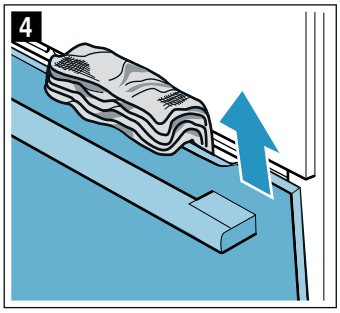

Clean the panels with glass cleaner and a soft cloth.

⚠ Warning – Risk of serious damage to health!
If the screws are loosened, the safety of the appliance can no longer be guaranteed. Microwave energy may escape. Never loosen the screws.

Do not unscrew the four black screws on the frame (fig. 5).

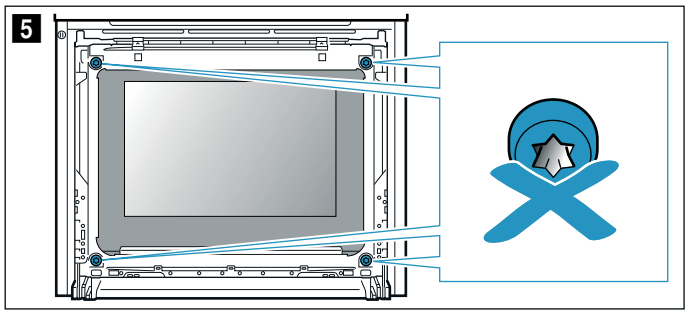

Fitting the door panels on the appliance

1. Insert the front panel downwards into the retainers (fig. 1).
2. Close the front panel until both upper hooks are opposite the opening (fig. 2).

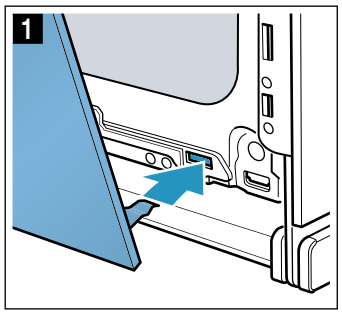

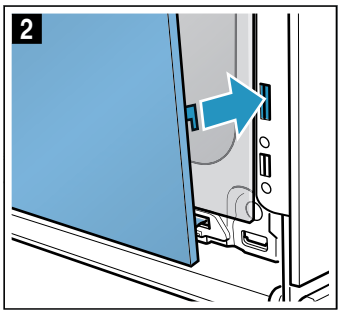

3. Press the front panel down until it clicks audibly into place (fig. 3)
4. Open the appliance door again slightly and remove the tea towel.
5. Screw both screws back in on the left and right.
6. Put the cover back in place and press on it until it clicks audibly into place (fig. 4).

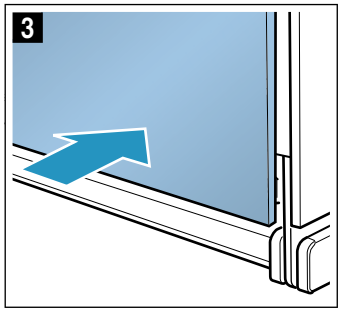

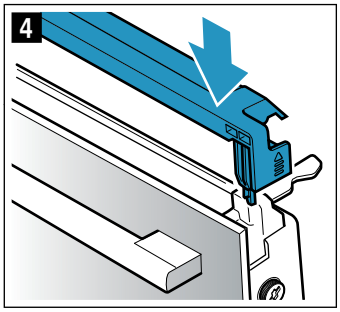

7. Close the appliance door.

Caution!
Do not use the cooking compartment again until the panels have been correctly fitted.

Trouble shooting

If a fault occurs, there is often a simple explanation. Before calling the after-sales service, please refer to the fault table and attempt to correct the fault yourself.

Tip: If a meal does not turn out exactly as you wanted, refer to the "Tested for you in our cooking studio" section.Here, you will find plenty of cooking tips and notes.

⚠ Warning – Risk of electric shock!
Incorrect repairs are dangerous. Repairs may only be carried out and damaged power cables replaced by one of our trained after-sales technicians. If the appliance is defective, unplug the appliance from the mains or switch off the circuit breaker in the fuse box. Contact the after-sales service.

⚠ Warning – Risk of injury!
Incorrect repairs are dangerous. Do not attempt to repair the appliance yourself. Repairs must only be carried out by one of our trained after-sales engineers. If the appliance is defective, call the after-sales service.

Fault table

⚠ Warning – Risk of electric shock!
- Work on the appliance electronics may only be performed by a specialist.
- Always disconnect the appliance from the power supply when work is carried out on the electronics. Switch off the circuit breaker or remove the fuse from your household fuse box.

Fault	Possible cause	Notes/remedy
The appliance does not work	The plug is not plugged into the mains	Connect the appliance to the power supply
	Power cut	Check whether other kitchen appliances are working
	The circuit breaker is faulty	Check in the fuse box to make sure that the fuse for the appliance is OK
After switching on an operating mode, a message is shown on the display which indicates that the temperature is too high	The appliance has not cooled down sufficiently	Allow the appliance to cool down and switch the operating mode on again
The appliance cannot be switched on; the symbol is shown on the display	The automatic childproof lock is activated	Press and hold the touch button until the symbol goes out
The appliance cannot be operated when it is switched on; the symbol is shown on the display	The childproof lock is activated	Press and hold the touch button until the symbol goes out
The appliance does not heat up; is shown on the display	Demo mode is activated in the basic settings	Disconnect the appliance from the mains for approx. 10 seconds (switch off the circuit breaker in the fuse box) and then deactivate demo mode in the basic settings within 3 minutes → *"Basic settings" on page 20*
"D" or "E" appears on the display, e.g. D0111 or E0111	Technical problem	Switch the appliance off and on again If the message appears again, call the after-sales service. Quote the exact error message
The cooking compartment becomes hot during microwave-only operation.	Drying function is switched on.	To prevent condensation forming when the appliance is in microwave-only mode, the appliance will automatically switch on the top heating element when it is set to 600 W or "Max.". The cooking result is not affected by this. You can switch this function off in the basic settings. Observe the information on the microwave. → *"Microwave" on page 17*
Home Connect does not work correctly.		Go to www.home-connect.com

Maximum operating time exceeded

Your appliance ends the operation automatically when no cooking time is set and the setting has not been changed for a long time.

The actual cooking time until the operation is stopped automatically varies according to the selected settings.

The appliance display indicates that the operation will end automatically. Afterwards, the operation is stopped.

To use the appliance again, switch it off beforehand. Then switch the appliance on again and set the required operation.

Cooking compartment bulbs

To light the interior of your cooking compartment, your appliance has one or more long-life LED bulbs.

However, if ever an LED bulb or the bulb's glass cover is defective, call the after-sales service. The lamp cover must not be removed.

Customer service

Our after-sales service is there for you if your appliance needs to be repaired. We will always find an appropriate solution, also in order to avoid after-sales personnel having to make unnecessary visits.

E number and FD number

When calling us, please quote the full product number (E no.) and the production number (FD no.) so that we can provide you with the correct advice. The rating plate bearing these numbers can be found when you open the appliance door.
On some appliances with a steam-assisted cooking function, you will find the rating plate behind the control panel.

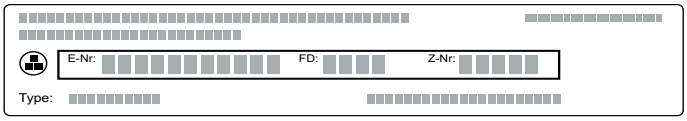

To save time, you can make a note of the numbers for your appliance and the telephone number of the after-sales service in the space below in case you need them.

E no.	**FD no.**
After-sales service ☏	

Please note that a visit from an after-sales service engineer is not free of charge in the event that the appliance has been misused, even during the warranty period.

Please find the contact data of all countries in the enclosed customer service list.

To book an engineer visit and product advice

GB 0344 892 8989
Calls charged at local or mobile rate.

IE 01450 2655
0.03 € per minute at peak. Off peak 0.0088 € per minute.

Rely on the professionalism of the manufacturer. You can therefore be sure that the repair is carried out by trained service technicians who carry original spare parts for your appliances.

Baking and roasting assistant

The baking and roasting assistant helps you to prepare meals with ease. The appliance applies the most suitable settings.

To achieve good results, the cooking compartment must not be too hot for the type of food you have selected. If it is, a message will appear on the display. Allow the cooking compartment to cool down and start again.

Information on the settings

- The cooking result depends on the quality of the food and the type of cookware. For an optimal cooking result, use food that is in good condition and chilled meat only.
- The baking and roasting assistant helps you to prepare classic cakes, bread and roasts. The appliance selects the optimal type of heating for you. It suggests a suitable temperature and cooking time, which you can change if you wish.
- Information is provided, e.g. on cookware, shelf position or the addition of liquid when cooking meat. Some food requires turning or stirring, etc. during cooking. This is shown in the display shortly after operation starts. An audible signal will remind you at the right time.
- Information on the right kind of cookware to use and tips and tricks for preparation can be found at the end of the instruction manual.

Selecting a meal

The following table shows the corresponding setting values for the listed meals.

Dishes
Sponge springform tin/loaf tin
Sponge (6 eggs)
Swiss roll
Yeast dough cake on baking sheet with dry topping
Plaited ring/loaf
Small baked puff-pastry items
Muffins, on one level
White bread in a loaf tin
Part-baked bread rolls/baguettes
Frozen pizza with thin base, 1 piece
Chips, frozen, on one level
Potato gratin, made from raw potatoes
Baked potatoes
Lasagne, fresh
Joint of pork, marbled, without rind
Meat loaf (1 kg)
Beef pot roast
Leg of lamb, boned

Dishes
Chicken, whole
Chicken legs
Goose, whole (3-4 kg)

Setting the food

You will be guided through the entire setting process for your chosen food.

1. Touch the ⏻ touch button to switch on the appliance.
2. Touch the ⌂ touch button.
3. Use the 〈 or 〉 button to select the "Baking and roasting assistant".
4. Use the ⌄ button to navigate to the next line.
5. Use the 〈 or 〉 button to select the required category.
6. Use the ⌄ button to navigate to the next line.
7. Use the 〈 or 〉 button to select the required meal.
8. Use the ⌄ button to navigate to the next line.
   The recommended settings appear on the display.
   Note: For some meals, you can also display notes, e.g. on the shelf height and cookware. Touch the 〉 button to do this. To return to the recommended settings, touch the 〈 button.
9. If required, you can change the recommended settings. Touch the ⌄ button to do this.
   Use the ⌄ or ⌃ button to navigate to the required setting.
   Use the 〈 or 〉 button to adjust the setting.
10. Touch the ▷|| touch button to start the appliance operation.

As soon as the cooking time has elapsed, an audible signal sounds and the appliance ends the operation automatically. Touch the ◷ touch button to end the audible signal.

Some recommended settings offer you the opportunity to continue cooking your dish.

When you are happy with the cooking result, use the ⌃ button to select "End".

If you are not happy with the cooking result, you can continue cooking your dish.

Continue cooking

1. Use the ⌄ button to select "Continue cooking".
2. If necessary, use the 〈 or 〉 button to change the recommended setting.
3. Touch the ▷|| touch button to start "Continue cooking".

Cancelling

Press and hold the ▷|| touch button until the appliance operation is cancelled.

Switching off the appliance

Touch the ⏻ touch button to switch off the appliance.

Programmes

You can prepare food very easily using the various programmes. You select a programme and enter the weight of your food. The program then applies the most suitable settings.

To achieve good results, the cooking compartment must not be too hot for the type of food you have selected. If it is, a message will appear on the display. Allow the cooking compartment to cool down and start again.

Information on the settings

- The cooking result depends on the quality of the food and the type of cookware used. For best results, only use high-quality food and refrigerated meat.For frozen products, only use food directly from the freezer.
- For some dishes, you will be required to enter the weight. The appliance will then apply the time and temperature settings for you.
  It is not possible to set weights outside the intended weight range.
- For roasting programmes, for which the appliance applies the temperature selection, temperatures can be as high as 300 °C. Therefore ensure that you are using heat-resistant cookware.
- Information about cookware, shelf position or adding liquid for meat is provided for you. For some dishes, the food needs to be turned or stirred during cooking. This is shown briefly on the display after the start. A signal reminds you to do this at the right time.
- Information about suitable cookware and preparation tips and tricks can be found at the end of the instruction manual.

Microwave

For the microwave, the appliance provides you with programmes that allow you to prepare food easily and quickly. Using the microwave significantly reduces cooking time – cooking time is virtually cut in half. As well as baking programmes and roasting programmes, whereby the microwave function is combined with a type of heating, defrost and cooking functions are also possible on their own.
The appliance applies the microwave output setting, type of heating and time and temperature setting for you. For all types of food, you only have to input the weight.

The appliance instructs you to use cookware that is suitable for the microwave. The "Microwave" section provides information on the type of cookware that is suitable. → *"Microwave" on page 17*

Selecting a dish

The following table shows the corresponding setting values for the listed dishes.

Dishes
Defrost poultry portions
Defrost meat
Defrost fish fillet
Vegetables, fresh
Vegetables, frozen
Boiled potatoes
Long grain rice
Steam fish fillet
Frozen pizza with thin base, 1 piece
Lasagne, frozen
Chicken, unstuffed
Chicken portions
Meat loaf made from fresh minced meat
Baked potatoes, whole

Setting the programme

You will be guided through the entire setting process for your chosen food.

1. Touch the ⏻ touch button to switch on the appliance.
2. Touch the ⌂ touch button.
3. Use the 〈 or 〉 button to select "Microwave programmes".
4. Use the ﹀ button to navigate to the next line.
5. Use the 〈 or 〉 button to select the required microwave programme.
6. Use the ﹀ button to navigate to the next line.
7. Use the 〈 or 〉 button to set the weight.
8. Firstly touch the ﹀ button to navigate upwards and then touch the 〉 button to navigate to the next line.
   Information on the slide-in level and the cookware to be used appears.
9. Touch the ▷|| touch button to start the appliance operation.

As soon as the cooking time has elapsed, an audible signal sounds and the appliance ends the operation automatically. Touch the ◷ touch button to stop the audible signal.

Some programmes offer you the option to continue cooking your dish.

When you are happy with the cooking result, use the ﹀ button to select "Finish".

If you are not happy with the cooking result, you can continue cooking your dish.

Continue cooking

1. Use the ﹀ button to select "Continue cooking".
2. If necessary, use the 〈 or 〉 button to change the recommended setting.
3. Touch the ▷|| touch button to start "Continue cooking".

Cancel

To cancel an operation that is in progress, touch the ⏻ touch button.

Switching off the appliance

Touch the ⏻ touch button to switch off the appliance.

Tested for you in our cooking studio

Here, you can find a selection of dishes and the ideal settings for them. We will show you which type of heating and temperature are best suited to your dish. You will get information on suitable cooking accessories and the height at which they should be placed in the oven. You will also get tips about cookware and preparation methods.

Note: A lot of steam can build up in the cooking compartment when cooking food.
Your appliance is very energy-efficient and radiates very little heat to its surroundings during operation. Due to the high difference in temperature between the appliance interior and the external parts of the appliance, condensation may build up on the door, control panel or adjacent kitchen cabinet panels. This is a normal physical phenomenon. Condensation can be reduced by preheating the oven or opening the door carefully.

Silicone moulds

For the best cooking results, we recommend dark-coloured metal baking tins/dishes.

Nevertheless, if you wish to use silicone moulds, follow the manufacturer's instructions and recipes. Silicone moulds are often smaller than normal baking tins. Quantity and recipe specifications may vary.

Cakes and small baked items

Your appliance offers you a range of heating types for the preparation of cakes and small baked items. You can find the ideal settings for many dishes in the settings tables.

Also refer to the notes in the section on allowing dough to rise.

Only use original accessories supplied with your appliance. These have been tailored to the cooking compartment and the operating modes of your appliance.

Baking in combination with a microwave

If you bake in combination with a microwave, you can reduce the cooking time considerably.

Always use heat-resistant cookware that is suitable for use in microwaves. Observe the notes on cookware suitable for microwaves. → *"Microwave" on page 17*

In combined operation, you can use conventional baking tins made from metal. If sparks form between the baking tin and the wire rack, check whether the baking tin is clean on the outside. Change the position of the baking tin on the wire rack. If this does not help, continue baking without the microwave. The baking time will be extended.

If you use baking tins/dishes made from plastic, ceramic or glass, the baking time indicated in the settings tables will be reduced. The cake will not brown as much underneath.

Baking in combination with a microwave is only possible on one level.

Shelf positions

Use the indicated shelf positions.

Baking on one level
When baking on one level, use the following shelf position:
- Level 1

Baking on two levels
Use Hot air. Baked items that are placed into the oven on trays or in baking tins/dishes at the same time will not necessarily be ready at the same time.
- Universal pan: Level 3
  Baking tray: Level 1
- Baking tins/dishes on the wire rack
  First wire rack: Level 3
  Second wire rack: Level 1

By preparing several dishes at the same time, you can make energy savings of up to 45 per cent. Position baking tins/dishes next to one another or offset and vertically stacked in the cooking compartment.

Accessories

Ensure that you always use suitable accessories and that they are placed in the oven the right way around.

Wire rack
Slide the wire rack in with the embossed "microwave" facing the appliance door, and the curved lip pointing downwards. Always place ovenware, tins and dishes on the wire rack.

Universal pan or baking tray
Slide the universal pan or the baking tray in carefully as far as the limit stop with the bevelled edge facing the appliance door.

When baking moist cakes or pastries with many toppings, use the universal pan so that any excess liquid does not overflow and make the cooking compartment dirty.

Baking tins
Dark- coloured metal baking tins are most suitable.

Tinplate baking tins, ceramic dishes and glass dishes extend baking time and mean that the baked item will not brown evenly.

Greaseproof paper
Only use greaseproof paper that is suitable for the selected temperature. Always cut greaseproof paper to size.

Recommended setting values

The table lists the optimal heating type for various baked items. The temperature and baking time depend on the amount and consistency of the dough/mixture. For this reason, the table specifies setting ranges. Try using the lower values to start with. A lower temperature will result in more even browning. You can use a higher setting next time if necessary.

Note: Baking times cannot be reduced by using higher temperatures. Cakes or small baked items would only be cooked on the outside, and would not be fully baked in the middle.

The setting values apply to food that is placed into a cold cooking compartment; by doing this, you can make energy savings of up to 20 per cent.If you preheat the oven, you can reduce the indicated baking times by several minutes.

Preheating is necessary for selected food, and this is indicated in the table. Do not place your food or accessories into the cooking compartment until it has finished preheating.

If you wish to follow one of your own recipes when baking, you should use the setting values listed for similar baked items in the table as reference.Additional information can be found in the baking tips listed after the settings table.

Remove unused accessories from the cooking compartment. This will ensure that you achieve the best possible cooking results and energy savings of up to 20 per cent.

Types of heating used:
- Hot air
- Top/bottom heating
- Circotherm intensive

Dish	Accessories/cookware	Shelf position	Heating function	Temperature in °C	MW power in watts	Cooking time in mins.
Cakes in tins						
Sponge cake, simple	Ring tin/cake tin	1		150-170	-	55-70
* Preheat						
** Preheat for 5 mins., do not use quick heat function						

Dish	Accessories/cookware	Shelf position	Heating function	Temperature in °C	MW power in watts	Cooking time in mins.
Sponge cake, simple	Ring tin/cake tin	1		160-180	90	30-40
Sponge cake, delicate	Ring tin/cake tin	1		150-170	-	60-80
Fruit flan made from sponge mixture, delicate	Ring/springform cake tin	1		160-180	-	45-60
Fruit flan made from sponge mixture, delicate	Ring/springform cake tin	1		170-190	90	35-45
Sponge flan base	Flan base tin	1		150-170	-	20-40
Fruit tart or cheesecake with short-crust pastry base	Springform cake tin, Ø 26 cm	1		160-170	-	65-85
Fruit tart or cheesecake with short-crust pastry base	Springform cake tin, Ø 26 cm	1		160-180	180	30-40
				100	-	20
Swiss flan	Pizza tray	1		190-210	-	45-55
Swiss flan	Pizza tray	1		180-200	-	50-60
Tart	Flan-base cake tin, black	1		190-200	-	25-40
Tart	Flan-base cake tin, black	1		190-210	-	25-40
Bundt yeast cake	Ring cake tin	1		150-160	-	65-75
Bundt yeast cake	Ring cake tin	1		150-160	-	60-70
Yeast cake in springform cake tin	Springform cake tin, Ø 28 cm	1		150-160	-	25-35
Yeast cake in springform cake tin	Springform cake tin, Ø 28 cm	1		150-160	-	25-35
Sponge base, 2 eggs	Flan base tin	1		160-170*	-	20-30
Sponge base, 2 eggs	Flan base tin	1		170-180	-	20-30
Sponge flan, 3 eggs	Springform cake tin, Ø 26 cm	1		160-170*	-	25-35
Sponge flan, 6 eggs	Springform cake tin, Ø 28 cm	1		150-170*	-	30-50
Sponge flan, 6 eggs	Springform cake tin, Ø 28 cm	1		150-170*	-	30-50
Cakes on baking trays						
Sponge cake with topping	Baking tray	1		160-180	-	20-40
Sponge cake, 2 levels	Universal pan + baking tray	3+1		150-170	-	35-50
Shortcrust tart with dry topping	Baking tray	1		170-190	-	25-40
Shortcrust tart with dry topping, 2 levels	Universal pan + baking tray	3+1		150-170	-	40-55
Shortcrust tart with moist topping	Universal pan	1		150-170	-	65-85
Shortcrust tart with moist topping	Universal pan	1		160-180	-	60-80
Swiss flan	Universal pan	1		190-210	-	45-55
Swiss flan	Universal pan	1		180-200	-	60-70
Yeast cake with dry topping	Baking tray	1		160-180	-	15-25
Yeast cake with dry topping	Baking tray	1		150-170	-	20-35
Yeast cake with dry topping, 2 levels	Universal pan + baking tray	3+1		160-170	-	25-35
Yeast cake with moist topping	Universal pan	1		180-200	-	30-45
Yeast cake with moist topping, 2 levels	Universal pan + baking tray	3+1		150-160	-	45-60
Plaited loaf, savarin	Baking tray	1		150-170	-	30-40
Plaited loaf, savarin	Baking tray	1		150-160	-	35-45
Swiss roll	Baking tray	1		190-210*	-	10-15

* Preheat

** Preheat for 5 mins., do not use quick heat function

Dish	Accessories/cookware	Shelf position	Heating function	Temperature in °C	MW power in watts	Cooking time in mins.
Stollen with 500 g flour	Universal pan	1		160-170	-	50-60
Stollen with 500 g flour	Universal pan	1		150-160	-	50-60
Strudel, sweet	Universal pan	1		190-210	-	55-65
Strudel, sweet	Universal pan	1		170-180	-	40-60
Strudel, frozen	Universal pan	1		190-210	-	35-50
Strudel, frozen	Universal pan	1		200-220	90	20-25
Small baked items						
Small cakes	Baking tray	1		160**	-	25-35
Small cakes	Baking tray	1		150**	-	20-30
Small cakes, 2 levels	Universal pan + baking tray	3+1		140**	-	30-40
Muffins	Muffin tray	1		170-190	-	15-30
Muffins, 2 levels	Muffin trays	3+1		150-170*	-	20-30
Small yeast cakes	Baking tray	1		160-170	-	30-40
Small yeast cakes	Baking tray	1		150-160	-	30-40
Puff pastry	Baking tray	2		170-190*	-	20-45
Puff pastry	Baking tray	1		180-200*	-	20-45
Puff pastry, 2 levels	Universal pan + baking tray	3+1		170-190*	-	20-45
Choux pastry	Baking tray	1		200-220	-	30-45
Danish pastry	Baking tray	1		160-180	-	20-30
Danish pastry	Baking tray	1		170-190	-	15-25
Biscuits						
Viennese whirls	Baking tray	1		150-160**	-	20-30
Viennese whirls	Baking tray	1		140-150**	-	25-35
Biscuits	Baking tray	2		140-160	-	15-30
Biscuits, 2 levels	Universal pan + baking tray	3+1		130-150	-	20-35
Meringue	Baking tray	2		80-90*	-	120-150
Meringue, 2 levels	Universal pan + baking tray	3+1		80-90*	-	120-180
Macaroons	Baking tray	2		90-110	-	20-40
Macaroons, 2 levels	Universal pan + baking tray	3+1		90-110	-	20-40

* Preheat

** Preheat for 5 mins., do not use quick heat function

Tips on baking

You want to find out whether the cake is completely cooked in the middle.	Push a cocktail stick into the highest point on the cake. If the cocktail stick comes out clean with no dough residue, the cake is ready.
The cake collapses.	Next time, use less liquid. Alternatively, set the temperature to be 10 °C lower and extend the baking time. Adhere to the specified ingredients and preparation instructions in the recipe.
The cake has risen in the middle but is lower around the edge.	Only grease the base of the springform cake tin. After baking, loosen the cake carefully with a knife.
The fruit juice overflows.	Next time, use the universal pan.
Small baked items stick to one another during baking.	There should be a gap of approx. 2 cm around each item. This gives enough space for the baked items to expand well and brown on all sides.
The cake is too dry.	Set the temperature 10 °C higher and shorten the baking time.
The cake is generally too light in colour.	If the shelf position and the cookware are correct, then you should increase the temperature if necessary or extend the baking time.

The cake is too light on top, and too dark underneath.	Bake the cake one level higher in the oven the next time.
The cake is too dark on top, and too light underneath.	Bake the cake one level lower in the oven the next time. Select a lower temperature and extend the baking time.
Cakes baked in a tray or tin are too brown at the back.	Place the baking tray in the middle of the accessories, not directly against the back wall.
The whole cake is too dark.	Select a lower temperature next time and extend the baking time if necessary.
The cake is unevenly browned.	Select a slightly lower temperature. Protruding greaseproof paper can affect the air circulation. Always cut greaseproof paper to size. Ensure that the baking tin does not stand directly in front of the openings in the cooking compartment back wall. When baking small items, you should use similar sizes and thicknesses wherever possible.
You were baking on several levels. The items on the top baking tray are darker than those on the lower baking tray.	Always use Hot air when baking on several levels. Baked items that are placed into the oven on trays or in baking tins/dishes at the same time will not necessarily be ready at the same time.
The cake looks good, but is not cooked properly in the middle.	Use a lower temperature and bake slightly longer; if necessary, add slightly less liquid. For cakes with a moist topping, bake the base first. Sprinkle it with almonds or breadcrumbs and then place the topping on top.
The cake cannot be turned out of the dish when it is turned upside down.	Allow the cake to cool down for 5 to 10 minutes after baking. If it still sticks, carefully loosen the cake around the edges again using a knife. Turn the cake tin upside down again and cover it several times with a cold, wet cloth. Next time, grease the baking tin/dish and sprinkle with breadcrumbs.

Bread and rolls

Your appliance offers you a range of heating types for baking bread and rolls. You can find the ideal settings for many dishes in the settings tables.

Also refer to the notes in the section on allowing dough to rise.

Only use original accessories supplied with your appliance. These have been tailored to the cooking compartment and the operating modes of your appliance.

Shelf positions

Use the indicated shelf positions.

Baking on one level
When baking on one level, use the following shelf position:
- Level 1

Baking on two levels
Use Hot air. Baked items that are placed into the oven on trays or in baking tins/dishes at the same time will not necessarily be ready at the same time.
- Universal pan: Level 3
  Baking tray: Level 1
- Baking tins/dishes on the wire rack
  First wire rack: Level 3
  Second wire rack: Level 1

By preparing several dishes at the same time, you can make energy savings of up to 45 per cent. Position baking tins/dishes next to one another or offset and vertically stacked in the cooking compartment.

Accessories

Ensure that you always use suitable accessories and that they are placed in the oven the right way around.

Wire rack
Slide the wire rack in with the embossed "microwave" facing the appliance door, and the curved lip pointing downwards. Always place ovenware, tins and dishes on the wire rack.

Universal pan or baking tray
Slide the universal pan or the baking tray in carefully as far as the limit stop with the bevelled edge facing the appliance door.

Baking tins
Dark- coloured metal baking tins are most suitable.

Tinplate baking tins, ceramic dishes and glass dishes extend baking time and mean that the baked item will not brown evenly.

Greaseproof paper
Only use greaseproof paper that is suitable for the selected temperature. Always cut greaseproof paper to size.

Frozen products

Do not use frozen products that are heavily frosted. Remove any ice on the food.

Some frozen products may be unevenly pre-baked. Uneven browning may remain even after baking.

Recommended setting values

The table lists the optimal heating type for various kinds of bread and bread roll. The temperature and baking time depend on the amount and consistency of the dough/mixture. For this reason, the table specifies setting ranges. Try using the lower values to start with. A lower temperature will result in more even browning.You can use a higher setting next time if necessary.

Note: Baking times cannot be reduced by using higher temperatures. The bread or bread rolls would only be cooked on the outside, but would not be fully baked in the middle.

The setting values apply to food that is placed into a cold cooking compartment; by doing this, you can make energy savings of up to 20 per cent.If you preheat the oven, you can reduce the indicated baking times by several minutes.

Preheating is necessary for selected food, and this is indicated in the table. Do not place your food or accessories into the cooking compartment until it has finished preheating. Some food turns out best if it is baked in several stages. These foods are indicated in the table.

The setting values for bread dough apply to both dough placed on a baking tray and dough placed in a loaf tin.

If you wish to follow one of your own recipes when baking, you should use the setting values listed for similar baked items in the table as reference.

Remove unused accessories from the cooking compartment. This will ensure that you achieve the best possible cooking results and energy savings of up to 20 per cent.

Caution!
Never pour water into the hot cooking compartment or place cookware containing water onto the bottom of the cooking compartment. The change in temperature can cause damage to the enamel.

Types of heating used:
- Hot air
- Top/bottom heating
- Circo-roasting
- Full-surface grill
- Centre-area grill

Dish	Accessories	Shelf position	Heating function	Temperature in °C	Cooking time in mins.
Bread					
White bread, 750 g	Universal pan or cake tin	1		180-200*	30-40
White bread, 750 g	Universal pan or cake tin	1		210-220*	10-15
				180-190	25-35
Multigrain bread, 1.5 kg	Universal pan or cake tin	1		230-240*	10-15
				200-210	40-50
Multigrain bread, 1.5 kg	Universal pan or cake tin	1		210-220*	10-15
				180-190	40-50
Wholemeal bread, 1 kg	Universal pan	1		230-240*	10-15
				200-210	40-50
Wholemeal bread, 1 kg	Universal pan	1		210-220*	10-15
				180-190	40-50
Flatbread	Universal pan	1		250-270	20-30
Flatbread	Universal pan	1		220-240	20-30
Bread rolls					
Part-cooked rolls or baguette, pre-baked	Universal pan	2		200-220	10-20
Bread rolls, sweet, fresh	Baking tray	1		170-180*	15-25
Bread rolls, sweet, fresh	Baking tray	1		160-170*	15-25
Bread rolls, sweet, fresh, 2 levels	Universal pan + baking tray	3+1		150-160*	20-30
Bread rolls, fresh	Baking tray	1		180-200	25-35
Bread rolls, fresh	Baking tray	1		170-190	25-35
Baguette, pre-baked, chilled	Universal pan	2		200-220	10-20
Bread rolls, frozen					
Part-cooked rolls or baguette, pre-baked	Universal pan	2		200-220	15-25
Lye bread, pieces of dough	Wire rack	1		220-240	15-25
Lye bread, pieces of dough	Wire rack	1		200-220	15-25
Croissant, pieces of dough	Baking tray	1		150-170*	20-35
Toast					
Toast with topping, 4 slices	Wire rack	2		290	5-15

* Preheat

Dish	Accessories	Shelf position	Heating function	Temperature in °C	Cooking time in mins.
Toast with topping, 12 slices	Wire rack	2		250	5-15
Browning toast	Wire rack	3		290	3-6
* Preheat					

Pizza, quiche and savoury cakes

Your appliance offers you a range of heating types for preparing pizza, quiche and savoury cakes. You can find the ideal settings for many dishes in the settings tables.

Also refer to the notes in the section on allowing dough to rise.

Only use original accessories supplied with your appliance. These have been tailored to the cooking compartment and the operating modes of your appliance.

Baking in combination with a microwave

If you bake in combination with a microwave, you can reduce the cooking time considerably.

In combined operation, you can use conventional baking tins made from metal. If sparks form between the baking tin and the wire rack, check whether the baking tin is clean on the outside. Change the position of the baking tin on the wire rack. If this does not help, continue baking without the microwave. The baking time will be extended.

If you use baking tins/dishes made from plastic, ceramic or glass, the baking time indicated in the settings tables will be reduced. The savoury cake will not brown as much underneath.

Baking in combination with a microwave is only possible on one level.

Shelf positions

Use the indicated shelf positions.

Baking on one level
When baking on one level, use the following shelf position:
- Level 1

Baking on two levels
Use Hot air. Baked items that are placed into the oven on trays or in baking tins/dishes at the same time will not necessarily be ready at the same time.
- Universal pan: Level 3
  Baking tray: Level 1
- Baking tins/dishes on the wire rack
  First wire rack: Level 3
  Second wire rack: Level 1

By preparing several dishes at the same time, you can make energy savings of up to 45 per cent. Position baking tins/dishes next to one another or offset and vertically stacked in the cooking compartment.

Accessories

Ensure that you always use suitable accessories and that they are placed in the oven the right way around.

Wire rack
Slide the wire rack in with the embossed "microwave" facing the appliance door, and the curved lip pointing downwards. Always place ovenware, tins and dishes on the wire rack.

Universal pan or baking tray
Slide the universal pan or the baking tray in carefully as far as the limit stop with the bevelled edge facing the appliance door.

Use the universal pan for pizzas with many toppings.

Baking tins
Dark- coloured metal baking tins are most suitable.

Tinplate baking tins, ceramic dishes and glass dishes extend baking time and mean that the baked item will not brown evenly.

Greaseproof paper
Only use greaseproof paper that is suitable for the selected temperature. Always cut greaseproof paper to size.

Frozen products

Do not use frozen products that are heavily frosted. Remove any ice on the food.

Some frozen products may be unevenly pre-baked. Uneven browning may remain even after baking.

Recommended setting values

The table lists the optimal heating type for various types of food. The temperature and baking time depend on the amount and consistency of the dough/mixture. For this reason, the table specifies setting ranges. Try using the lower values to start with. A lower temperature will result in more even browning. You can use a higher setting next time if necessary.

Note: Baking times cannot be reduced by using higher temperatures. The food would only be cooked on the outside, but would not be fully baked in the middle.

The setting values apply to food that is placed into a cold cooking compartment; by doing this, you can make energy savings of up to 20 per cent.If you preheat the oven, you can reduce the indicated baking times by several minutes.

Preheating is necessary for selected food, and this is indicated in the table. Do not place your food or accessories into the cooking compartment until it has finished preheating.

If you wish to follow one of your own recipes when baking, you should use the setting values listed for similar baked items in the table as reference.

Remove unused accessories from the cooking compartment. This will ensure that you achieve the best possible cooking results and energy savings of up to 20 per cent.

Types of heating used:
- Hot air
- Top/bottom heating
- Circotherm intensive

Dish	Accessories	Shelf position	Type of heating	Temperature in °C	MW power in watts	Cooking time in mins.
Pizza						
Pizza, fresh	Baking tray	1		200-220	-	20-30
Pizza, fresh, 2 levels	Universal pan + baking tray	3+1		180-200	-	35-45
Pizza, fresh, thin base	Pizza tray	1		210-230	-	20-30
Pizza, chilled	Wire rack	1		210-230	-	10-20
Pizza, frozen						
Pizza, thin base, x 1	Wire rack	1		210-230	-	10-20
Pizza, thin base, x 1	Universal pan	1		210-230	90	10-20
Pizza, thin base, x 2	Wire rack + baking tray	3+1		200-220	-	15-25
Pizza, deep-pan, x 1	Wire rack	1		180-200	-	20-30
Pizza, deep-pan, x 1	Universal pan	1		180-200	90	15-25
Pizza, deep-pan, x 2	Universal pan + wire rack	3+1		160-180	-	25-35
Pizza baguette	Wire rack	1		200-220	-	20-30
Pizza baguette, x 2	Universal pan	1		180-200	90	10-20
Mini pizza	Wire rack	1		210-230	-	10-20
Mini pizzas, x 9	Universal pan	1		210-230	90	10-20
Savoury cakes and quiches						
Savoury cakes in a tin	Springform cake tin, diameter 28 cm	1		170-190	-	50-60
Savoury cakes in a tin	Springform cake tin, diameter 26 cm	1		180-200	90	35-40
Quiche	Flan-base cake tin, black	1		190-210	-	35-55
Quiche	Flan-base cake tin, black	1		190-210	-	30-45
Tarte flambée	Universal pan	1		260-280*	-	10-20
Pierogi	Ovenproof dish	1		190-200	-	40-50
Empanada de atún	Universal pan	1		180-190	-	35-45
Empanada de atún	Universal pan	1		180-200	-	30-45
Börek	Universal pan	1		180-200	-	35-45
Börek	Universal pan	1		180-200	-	35-45

* Preheat

Bakes and soufflés

Your appliance offers a range of heating types for preparing bakes and soufflés. You can find the ideal settings for many dishes in the settings tables.

Only use original accessories supplied with your appliance. These have been tailored to the cooking compartment and the operating modes of your appliance.

Preparing food with a microwave

If you prepare food only in a microwave or in combination with a microwave, the cooking time may be considerably reduced.

Always use heat-resistant cookware that is suitable for use in microwaves. Observe the notes on cookware suitable for microwaves. ⟶ *"Microwave" on page 17*

Take ready-to-eat meals out of the packaging. You can cook more quickly and evenly using cookware which is suitable for use in microwaves.

Shelf positions

Always use the indicated shelf positions.

You can prepare dishes on one level using a baking tin/dish or the universal pan.
- Baking tins/dishes on the wire rack: Level 1
- Universal pan: Level 2

You can also prepare soufflés in a water bath in the universal pan. To do so, slide the universal pan in at level 1.

By preparing several dishes at the same time, you can make energy savings of up to 45 per cent. Position baking tins/dishes next to one another in the cooking compartment.

Accessories

Ensure that you always use suitable accessories and that they are placed in the oven the right way around.

Wire rack
Slide the wire rack in with the embossed "microwave" facing the appliance door, and the curved lip pointing downwards. Always place ovenware, tins and dishes on the wire rack.

Universal pan
Slide in the universal pan carefully as far as the limit stop, with the bevelled edge facing the appliance door.

Cookware
Use wide, shallow cookware for bakes and gratins. In deep, narrow cookware, food requires more time to cook, and the top will be darker.

Recommended setting values

In the table, you can find the ideal heating type for various bakes and soufflés. The temperature and cooking time are dependent on the quantity of food and the recipe. How well cooked a bake is will depend on the size of the cookware and the depth of the bake. Settings ranges are indicated for this reason. Try using the lower values at first. A lower temperature results in more even browning. You can increase the temperature next time if necessary.

Note: Cooking times cannot be reduced by using higher temperatures. Bakes or soufflés would only be cooked on the outside, but would be raw in the middle.

The setting values apply to dishes placed into a cold cooking compartment. By doing so, you can make energy savings of up to 20 per cent. If you preheat the oven, the indicated cooking times will be reduced by several minutes.

If you wish to follow one of your own recipes when cooking, you can use similar dishes in the table as a reference.

Remove unused accessories from the cooking compartment. This will achieve the best possible cooking results and energy savings of up to 20 per cent.

Types of heating used:
- Hot air
- Top/bottom heating
- Circo-roasting
- Circotherm intensive

Dish	Accessories/cookware	Shelf position	Type of heating	Temperature in °C	MW power in watts	Cooking time in mins.
Bake, savoury, cooked ingredients	Ovenproof dish	1		200-220	-	35-55
Bake, savoury, cooked ingredients	Ovenproof dish	1		140-160	360	20-30
Bake, sweet	Ovenproof dish	1		170-190	-	45-60
Bake, sweet	Ovenproof dish	1		140-160	360	25-35
Lasagne, fresh, 1 kg	Ovenproof dish	1		160-180	-	50-60
Lasagne, fresh, 1 kg	Ovenproof dish	1		180-200	360	20-30
Lasagne, frozen, 400 g	Universal pan	1		190-210	-	30-40
Lasagne, frozen, 400 g	Cookware, uncovered	1		200-210	180	20-25
Potato gratin, raw ingredients, 4 cm deep	Ovenproof dish	1		170-180	-	50-65
Potato gratin, raw ingredients, 4 cm deep	Ovenproof dish	1		170-190	360	20-25

* Preheat

Dish	Accessories/cookware	Shelf position	Type of heating	Temperature in °C	MW power in watts	Cooking time in mins.
Soufflé	Ovenproof dish	1		160-170*	-	40-50
Soufflé	Ovenproof dish	1		180-200*	-	30-40
Soufflé	Individual moulds	1		170-190	-	65-75
* Preheat						

Poultry

Your appliance offers you a range of heating types for preparing poultry. You can find the ideal settings for certain dishes in the settings tables.

Roasting on the wire rack

Roasting on the wire rack is particularly well suited for larger poultry or for multiple pieces at the same time.

Slide the wire rack in at the indicated shelf position with the imprint "Microwave" facing the appliance door and the outer rail facing downwards. In addition, slide the universal pan in at the shelf position underneath with the slanted edge facing the appliance door.

Depending on the size and type of the poultry, pour up to ½ litres of water into the universal pan. Any dripping fat will be caught. You can make a sauce from these juices. This will also result in less smoke and ensure that the cooking compartment stays cleaner.

Roasting in cookware

Only use cookware which is suitable for use in an oven. Check whether the cookware fits in the cooking compartment.

Glass cookware is most suitable. Place hot glass cookware onto a dry mat after cooking. If the surface is damp or cold, the glass may crack.

Shiny roasting dishes made from stainless steel or aluminium reflect heat like a mirror and are therefore not particularly suitable. The poultry cooks slower and does not brown so well. Use a higher temperature and/or a longer cooking time.

Observe the manufacturer's instructions for your roasting cookware.

Uncovered cookware
It is best to use a deep roasting tin/dish for roasting poultry. Place the tin/dish onto the wire rack. If you do not have any suitable cookware, use the universal pan.

Covered cookware
When cooking with covered cookware, the cooking compartment remains considerably cleaner. Ensure that the lid fits well and closes properly. Place the cookware onto the wire rack.

Very hot steam may escape when opening the lid after cooking. Lift the lid at the rear, so that the hot steam can escape away from you.

Poultry can also become crispy in a covered roasting dish. To do so, use a roasting dish with a glass lid and set a higher temperature.

Roasting in combination with a microwave

Poultry is particularly well suited to being prepared in combination with a microwave. The cooking time is considerably reduced by doing so.

As opposed to conventional operation, the cooking time is based on the total weight when roasting in combination with a microwave.

Tip: If you have quantities other than those indicated in the settings tables, the following basic rule applies: double the quantity equates to roughly double the cooking time.

Always use heat-resistant cookware that is suitable for use in microwaves. Roasting dishes made from metal or Römertopf dishes are only suitable for roasting without using the microwave. Observe the notes on cookware suitable for microwaves. → *"Microwave" on page 17*

Grilling

Keep the appliance door closed when using the grill. Never grill with the appliance door open.

Slide the wire rack in at the indicated shelf position with the imprint "Microwave" facing the appliance door and the outer rail facing downwards. In addition, slide the universal pan in at least one shelf position lower, with the slanted edge facing the appliance door. Any dripping fat will be caught.

When grilling, try wherever possible to use pieces of food which are of a similar thickness and weight. This will allow them to brown evenly and remain succulent and juicy. Place the food to be grilled directly onto the wire rack.

Use tongs to turn the pieces of food you are grilling. If you pierce the meat with a fork, the juices will run out and it will become dry.

Notes

- The grill element switches itself continuously on and off; this is normal. The set temperature determines how frequently this occurs.
- Smoke may be produced when grilling.

Recommended setting values

In the table, you can find the ideal heating type for the kind of poultry you are cooking. The temperature and cooking time depend on the amount, composition and temperature of the food. Setting ranges are indicated for this reason. Try using the lower values at first. You can increase the temperature next time if necessary.

The setting values are based on the assumption that unstuffed, chilled, ready-to-roast poultry is placed into a cold cooking compartment. By doing so, you can make

energy savings of up to 20 per cent. If you preheat the oven, the indicated cooking times will be reduced by several minutes.

In the table, you can find specifications for poultry with default values for the weight. If you wish to cook heavier poultry, use the lower temperature in every case. If cooking multiple pieces, use the weight of the heaviest piece as a reference for determining the cooking time. The individual pieces should be approximately equal in size.

A general rule: the larger the poultry is, the lower the cooking temperature and the longer the cooking time.

Turn the poultry after approx. ½ to ⅔ of the indicated time.

Note: Only use greaseproof paper that is suitable for the selected temperature. Always cut greaseproof paper to size.

Tips

- For duck or goose, pierce the skin on the underside of the wings. This allows the fat to run out.
- If using duck breast, score the skin. Do not turn duck breasts.
- When you turn poultry, ensure that the breast side or the skin side is underneath at first.
- Poultry will turn out particularly crispy and brown if you baste it towards the end of the roasting time with butter, salted water or orange juice.

Remove unused accessories from the cooking compartment. This will achieve the best possible cooking results and energy savings of up to 20 per cent.

Types of heating used:

- Hot air
- Top/bottom heating
- Circo-roasting
- Circotherm intensive
- Full-surface grill

Dish	Accessories/cookware	Shelf position	Type of heating	Temperature in °C	MW power in watts	Cooking time in mins.
Chicken						
Chicken, 1 kg	Cookware, uncovered	1		200-220	-	60-70
Chicken, 1 kg	Cookware, covered	1		230-250	360	25-35
Chicken breast fillet, 150 g each (grilling)	Wire rack	2		290*	-	15-20
Chicken breast fillet, x 2, 150 g each (grilling)	Cookware, uncovered	1		190-210	180	25-30
Small chicken portions, 250 g each	Wire rack	2		220-230	-	30-35
Small chicken portions, x 4, 250 g each	Cookware, uncovered	1		190-210	360	20-30
Chicken goujons, nuggets, frozen	Universal pan	2		200-220	-	10-20
Chicken goujons, nuggets, frozen, 250 g	Universal pan	1		190-210	360	15-20
Poulard, 1.5 kg	Cookware, uncovered	1		200-220	-	70-90
Poulard, 1.5 kg	Cookware, covered	1		200-220	360	30
					180	15-25
Duck and goose						
Duck, 2 kg	Cookware, uncovered	1		180-200	-	90-110
Duck, 2 kg	Universal pan	1		170-190	180	60-80
Duck breast, 300 g each	Wire rack	2		230-250	-	25-30
Goose, 3 kg	Cookware, uncovered	1		160-170	-	120-150
Goose, 3 kg	Cookware, uncovered	1		170-190	180	80-90
Goose legs, 350 g each	Wire rack	2		210-230	-	40-50
Goose legs, 350 g each	Universal pan	1		170-190	180	30-40
Turkey						
Small turkey, 2.5 kg	Cookware, uncovered	1		180-190	-	70-90
Small turkey, 2.5 kg	Cookware, covered	1		210-230	360	45-50

* Preheat for 5 mins

Dish	Accessories/cookware	Shelf position	Type of heating	Temperature in °C	MW power in watts	Cooking time in mins.
Turkey breast, boned, 1 kg	Cookware, covered	1		240-260	-	80-100
Turkey thigh, with bone, 1 kg	Cookware, uncovered	1		180-200	-	80-100
Turkey thigh, with bone, 1 kg	Cookware, covered	1		210-230	360	45-50
* Preheat for 5 mins						

Meat

Your appliance offers you many heating types for preparing meat. You can find the ideal settings for many dishes in the settings tables.

Roasting and braising

Baste lean meat with fat as required or cover it with strips of bacon.

Score the rind crosswise. If you turn the joint when cooking, ensure that the rind is underneath at first.

When the joint is ready, turn off the oven and allow it to rest for another 10 minutes in the cooking compartment. This allows the meat juices to be better distributed. Wrap the joint in aluminium foil if necessary. The recommended standing time is not included in the cooking time specified.

Roasting on the wire rack

On the wire rack, meat will become very crispy on all sides.

Depending on the size and type of the meat, add up to ½ litres of water to the universal pan. Any dripping fat and meat juices will be caught. You can prepare a sauce using these meat juices. In addition, less smoke is generated, and the cooking compartment stays cleaner.

Slide the wire rack in at the indicated shelf position with the imprint "Microwave" facing the appliance door and the outer rail facing downwards. In addition, slide the universal pan in at the shelf position underneath with the slanted edge facing the appliance door.

Roasting and braising in cookware

It is more convenient to roast and braise meat in cookware. You can take the joint out of the cooking compartment more easily in the cookware, and prepare the sauce in the cookware itself.

Only use cookware which is suitable for use in an oven. Check whether the cookware fits in the cooking compartment.

Glass cookware is most suitable. Place hot glass cookware onto a dry mat after cooking. If the surface is damp or cold, the glass may crack.

Add in a little liquid for roasting if the meat is lean. A covering of approx. ½ cm depth should be applied to the base of any glass cookware.

The amount of liquid is dependent on the type of meat, the cookware material and also on whether or not a lid is used. If preparing meat in an enamelled or dark metal roasting dish, it will need a little more liquid than if cooked in glass cookware.

The steam evaporates in the cookware when roasting. Carefully pour in more liquid if required.

Shiny roasting dishes made from stainless steel or aluminium reflect heat like a mirror and are therefore not particularly suitable. The meat cooks more slowly and will not brown so much. Use a higher temperature and/or a longer cooking time.

Observe the manufacturer's instructions for your roasting cookware.

Uncovered cookware
Use a deep roasting tin/dish for roasting meat. Place the tin/dish onto the wire rack. If you do not have any suitable cookware, use the universal pan.

Covered cookware
When cooking with covered cookware, the cooking compartment remains considerably cleaner. Ensure that the lid fits well and closes properly. Place the cookware onto the wire rack.

The distance between the meat and the lid must be at least 3 cm. The meat may rise.

Very hot steam may escape when opening the lid after cooking. Lift the lid at the rear, so that the hot steam can escape away from you.

If necessary, braise the meat first by searing it. Add water, wine, vinegar or a similar liquid to the braising liquid. A covering approx. 1-2 cm deep should be applied to the base of the cookware.

The steam evaporates in the cookware when roasting. Carefully pour in more liquid if required.

Meat can also become crispy in a covered roasting dish. To do so, use a roasting dish with a glass lid and set a higher temperature.

Roasting in combination with a microwave

Certain foodstuffs can be prepared in combination with a microwave. The cooking time is considerably reduced by doing so.

As opposed to conventional operation, the cooking time is based on the total weight when roasting in combination with a microwave.

Tip: If you have quantities other than those indicated in the settings tables, the following basic rule applies: double the quantity equates to roughly double the cooking time.

Always use heat-resistant cookware that is suitable for use in microwaves. Roasting dishes made from metal or Römertopf dishes are only suitable for roasting without using the microwave. Observe the notes on cookware suitable for microwaves. → *"Microwave" on page 17*

Caution!
If you use an oven bag, do not seal it shut with metal clips. Use kitchen string. Do not use metal skewers for roulades. Sparks may form as a result.

Grilling

Keep the appliance door closed when using the grill. Never grill with the appliance door open.

Slide the wire rack in at the indicated shelf position with the imprint "Microwave" facing the appliance door and the outer rail facing downwards. In addition, slide the universal pan in at least one shelf position lower, with the slanted edge facing the appliance door. Any dripping fat will be caught.

When grilling, try wherever possible to use pieces of food which are of a similar thickness and weight. This will allow them to brown evenly and remain succulent and juicy. Place the food to be grilled directly onto the wire rack.

Use tongs to turn the pieces of food you are grilling. If you pierce the meat with a fork, the juices will run out and it will become dry.

Do not add salt until after the meat has been grilled. Salt draws water from the meat.

Notes

- The grill element switches itself continuously on and off; this is normal. The set temperature determines how frequently this occurs.
- Smoke may be produced when grilling.

Recommended setting values

You can find the ideal heating type for many meat dishes in the table. Temperature and cooking time depend on the amount, composition and temperature of the food. Settings ranges are indicated for this reason. Try using the lower values at first. You can increase the temperature next time if necessary.

The setting values apply to chilled meat placed into the cold cooking compartment. By doing so, you can make energy savings of up to 20 per cent. If you preheat the oven, you can reduce the indicated cooking times by several minutes.

You can find information on roasts and default values for weights in the table. If you wish to roast a heavy joint of meat, you should definitely use a lower temperature. If roasting several joints, use the weight of the heaviest piece as a basis for determining the cooking time. The individual pieces should be approximately equal in size.

As a general rule: the larger a roasting joint is, the lower the cooking temperature and the longer the cooking time.

Turn roasting joints and grilled items after approx. ½ to ⅔ of the indicated time.

If you wish to follow one of your own recipes, you should use similar dishes as a reference. You can find additional information in the tips on roasting, braising and grilling attached to the settings table.

Remove unused accessories from the cooking compartment. This will achieve the best possible cooking results and energy savings of up to 20 per cent.

Types of heating used:
- Hot air
- Top/bottom heating
- Circo-roasting
- Full-surface grill
- Microwave

Dish	Accessories/cookware	Shelf position	Type of heating	Temperature in °C	MW power in watts	Cooking time in mins.
Pork						
Joint of pork without rind, e.g. neck, 1.5 kg	Cookware, uncovered	1		180-200	-	120-130
Joint of pork without rind, e.g. neck, 1.5 kg	Cookware, covered	1		180-200	180	40-50
Joint of pork with rind, e.g. shoulder, 2 kg	Cookware, uncovered	1		190-200	-	130-140
Pork tenderloin steak, 1.5 kg	Cookware, uncovered	1		220-230	-	70-80
Pork tenderloin steak, 1.5 kg	Cookware, covered	1		230-240	90	50-60
Fillet of pork, 400 g	Wire rack	2		220-230	-	20-25
Smoked pork on the bone, 1 kg (with a little added water)	Cookware, covered	1		210-220	-	60-80
Smoked pork on the bone, 1 kg	Cookware, uncovered	1		-	360	40-50
Pork steaks, 2 cm thick	Wire rack	3		250	-	16-20

* Preheat
** Do not turn
*** Slide the universal pan in underneath at shelf position 1
**** Turn after 2/3 of the total time

Dish	Accessories/cookware	Shelf position	Type of heating	Temperature in °C	MW power in watts	Cooking time in mins.
Pork medallions, 3 cm thick (preheat oven for 5 mins.)	Wire rack	3		290*	-	8-12
Beef						
Fillet of beef, medium, 1 kg	Cookware, uncovered	1		210-220	-	40-50
Fillet of beef, medium, 1 kg	Cookware, covered	1		180-200	90	30-40
Pot-roasted beef, 1.5 kg	Cookware, covered	1		200-220	-	130-140
Sirloin, medium, 1.5 kg	Cookware, uncovered	1		220-230	-	60-70
Sirloin, medium, 1.5 kg	Cookware, uncovered	1		240-260	180	30-40
Steak, 3 cm thick, medium	Wire rack	2		290	-	15-20
Burger, 3-4 cm thick****	Wire rack	2		290	-	20-30
Veal						
Joint of veal, 1.5 kg	Cookware, uncovered	1		160-170	-	100-120
Joint of veal, 1.5 kg	Cookware, covered	1		200-210	90	70-80
Knuckle of veal, 1.5 kg	Cookware, uncovered	1		200-210	-	100-110
Knuckle of veal, 1.5 kg	Cookware, uncovered	1		200-220	180	30
					90	30-40
Lamb						
Leg of lamb, boned, medium, 1.5 kg	Cookware, uncovered	1		170-190	-	50-70
Leg of lamb, boned, medium, 1.5 kg	Cookware, covered	1		240-260	360	30
					180	35-40
Saddle of lamb on the bone**	Cookware, uncovered	1		180-190	-	40-50
Saddle of lamb on the bone**	Cookware, uncovered	1		190-210	90	30-40
Lamb cutlet***	Wire rack	2		290	-	12-18
Sausages						
Grilled sausages	Wire rack	2		290	-	10-20
Meat dishes						
Meat loaf, 1 kg	Cookware, uncovered	1		170-180	-	70-80
Meat loaf, 1 kg + 50 ml water	Cookware, uncovered	1		170-190	360	30-40

* Preheat
** Do not turn
*** Slide the universal pan in underneath at shelf position 1
**** Turn after 2/3 of the total time

Tips on roasting and braising

The cooking compartment becomes very dirty.	Prepare your food in an enclosed roaster with higher temperature or use the grill tray. You will achieve the best roasting results if you use the grill tray. The grill tray can be bought later as a special accessory.
The roast is too dark and the crackling is burned in places, and/or the roast is too dry.	Check the shelf position and temperature. Select a lower temperature the next time and reduce the roasting time if necessary.
The crackling is too thin.	Increase the temperature or switch on the grill briefly at the end of the roasting time.
The roast looks good but the juices are burnt.	Next time, use a smaller roasting dish and add more liquid if necessary.
The roast looks good but the juices are too clear and watery.	Next time, use a larger roasting dish and add less liquid if necessary.

The meat gets burned during braising.	The roasting dish and lid must fit together well and close properly. Reduce the temperature and add more liquid when braising if necessary.
The roast is not well-done enough.	Carve the roast. Prepare the sauce in the roasting dish and add the sliced roast meat to the sauce. Finish cooking the meat using the microwave only.

Fish

Your appliance offers you a range of heating types for preparing fish. You can find the ideal settings for many dishes in the settings tables.

The whole fish does not have to be turned. Place the whole fish into the cooking compartment in swimming position with the dorsal fin facing upwards. Placing half a potato or a small oven-proof container in the stomach cavity of the fish will provide stability.

You can tell when the fish is cooked because the dorsal fin can be removed easily.

Roasting and grilling on the wire rack

Slide the wire rack in at the indicated shelf position with the imprint "Microwave" facing the appliance door and the outer rail facing downwards. In addition, slide the universal pan in at least one shelf position lower, with the slanted edge facing the appliance door.

Pour up to ½ litres of water into the universal pan, depending on the size and type of the fish. Any dripping liquid will be caught. Less smoke is generated and the cooking compartment stays cleaner.

Keep the appliance door closed when using the grill. Never grill with the appliance door open.

When grilling, try wherever possible to use pieces of food which are of a similar thickness and weight. This will allow them to brown evenly and remain succulent and juicy. Place the food to be grilled directly onto the wire rack.

Use tongs to turn the pieces of food you are grilling. If you pierce the fish with a fork, the juices will run out and it will become dry.

Notes

- The grill element switches itself continuously on and off; this is normal. The set temperature determines how frequently this occurs.
- Smoke may be produced when grilling.

Roasting and stewing in cookware

Only use cookware which is suitable for use in an oven. Check whether the cookware fits in the cooking compartment.

Glass cookware is most suitable. Place hot glass cookware onto a dry mat after cooking. If the surface is damp or cold, the glass may crack.

Shiny roasting dishes made from stainless steel or aluminium reflect heat like a mirror and are therefore not particularly suitable. The fish cooks more slowly and browns less. Use a higher temperature and/or a longer cooking time.

Observe the manufacturer's instructions for your roasting cookware.

Uncovered cookware
To cook a whole fish, it is best to use a deep roasting tin/dish. Place the tin/dish onto the wire rack. If you do not have any suitable cookware, use the universal pan.

Covered cookware
When cooking with covered cookware, the cooking compartment remains considerably cleaner. Ensure that the lid fits well and closes properly. Place the cookware onto the wire rack.

When stewing, add two to three tablespoons of liquid and a little lemon juice or vinegar into the cookware.

Very hot steam may escape when opening the lid after cooking. Lift the lid at the rear, so that the hot steam can escape away from you.

Fish can also become crispy in a covered roasting dish. Here, use a roasting dish with a glass lid and set a higher temperature.

Steaming fish in the microwave

You can also steam fish in the microwave.

To do so, use enclosed cookware that is suitable for microwave use or use a plate or microwave film to cover the dish. Observe the notes on cookware suitable for microwaves. → *"Microwave" on page 17*

This will help retain the flavour and means you can use salt and seasonings sparingly. If cooking fish whole, add one to three tablespoons of water or lemon juice.

After cooking, leave the fish to rest for another 2-3 minutes to compensate for the temperature difference.

Take ready-to-eat meals out of the packaging. You can cook more quickly and evenly using cookware which is suitable for use in microwaves.

Recommended setting values

You can find the ideal heating type for your fish dishes in the table. The temperature and cooking time depend on the amount, composition and temperature of the food. Settings ranges are indicated for this reason. Try using lower setting values first. You can use a higher setting next time if necessary.

The setting values are based on the assumption that chilled fish is placed into a cold cooking compartment. By doing so, you can make energy savings of up to 20 per cent. If you preheat the oven, you can reduce the indicated cooking times by several minutes.

In the table, you can find information for fish with default values for the weight. If you want to cook a heavier fish, you should definitely use the lower temperature. If cooking several fish, you should use the weight of the heaviest fish as a reference for determining the cooking time. The individual fish should be approximately the same size.

As a general rule: the larger a fish, the lower the cooking temperature and the longer the cooking time.

Turn any fish which is not in swimming position after approx. ½ to ⅔ of the indicated time.

Note: Only use greaseproof paper that is suitable for the selected temperature. Always cut greaseproof paper to size.

Remove unused accessories from the cooking compartment. This will achieve the best possible cooking results and energy savings of up to 20 per cent.

Types of heating used:
- Circo-roasting
- Circotherm intensive
- Full-surface grill
- Microwave

Dish	Accessories/cookware	Shelf position	Type of heating	Temperature in °C	MW power in watts	Cooking time in mins.
Fish						
Fish, grilled, whole 300 g, e.g. trout	Cookware, uncovered	1		170-190	-	20-30
Fish, grilled, whole 300 g, e.g. trout	Wire rack	2		250	90	15-20
Fish, braised, whole 300 g, e.g. trout	Cookware, covered	1		-	600	3
					360	2-7
Fish, grilled, whole 1.5 kg, e.g. salmon	Cookware, uncovered	1		170-190	-	30-40
Fish, braised, whole 1.5 kg, e.g. salmon	Cookware, covered	1		-	600	10
					360	10-15
Fish fillets						
Fish fillet, plain, grilled	Wire rack	2		220*	-	15-25
Fish fillet, plain, braised, 400 g	Cookware, covered	1		-	600	4
					360	5-15
Fish steaks						
Fish steak, 3 cm thick**	Wire rack	2		290	-	18-22
Fish, frozen						
Fish, whole 300 g, e.g. trout	Cookware, covered	1		-	600	5
					360	7-12
Fish fillet, plain	Cookware, covered	1		210-230	-	25-40
Fish fillet, plain, 400 g	Cookware, covered	1		-	600	10-15
Fish fillet, au gratin	Wire rack	2		220-240	-	35-45
Fish fillet, au gratin, 400 g	Cookware, uncovered	1		290	360	15-20
Fish fingers***	Baking tray	1		220-240	-	10-20
Fish dishes						
Fish terrine, 1000 g	Terrine mould	1		-	360	20-25

* Preheat
** Slide the universal pan in underneath at shelf position 1
*** Turn during cooking

Vegetables and side dishes

Here, you can find information for preparing grilled vegetables, potatoes and frozen potato products.

Remove unused accessories from the cooking compartment. This will allow you to achieve ideal cooking results and save energy.

Preparing food in combination with a microwave

If you wish to cook in combination with a microwave, you should always use enclosed cookware which is suitable for use in microwaves. If you do not have a lid that fits your cookware, use a plate or microwave film for this purpose. Observe the notes on cookware suitable for microwaves.

Food which lies flat will cook more quickly than food which is piled high. Arrange the food as flat as possible in the cookware for this reason.

Cereal products foam a lot during cooking. For all cereal products, such as rice, use tall cookware with a lid.

This will help the food retain its flavour. This means that you can use salt and seasonings sparingly.

If you cannot find any indicated settings for your food quantity, you should extend or reduce the cooking time according to the following basic rule: double the quantity equates to roughly double the cooking time.

Stir or turn the food two to three times during this time. After heating up the food, leave it to rest for two to three minutes to compensate for the temperature difference.

The food transfers heat to the cookware. It can become very hot when only using a microwave for cooking.

Shelf positions

Use the indicated shelf positions.

Cooking on one level
Adhere to the specifications in the table.

Cooking on two levels
Use Hot air. Food on baking trays that are placed in the oven at the same time will not necessarily be ready at the same time.

- Universal pan: Level 3
- Baking tray: Level 1

Accessories

Ensure that you always use suitable accessories and that they are placed in the oven the right way around.

Wire rack
Slide the wire rack in with the embossed "microwave" facing the appliance door, and the curved lip pointing downwards. Always place ovenware, tins and dishes on the wire rack.

Universal pan or baking tray
Slide the universal pan or the baking tray in carefully as far as the limit stop with the bevelled edge facing the appliance door.

Greaseproof paper
Only use greaseproof paper that is suitable for the selected temperature. Always cut greaseproof paper to size.

Recommended setting values

In the table, you can find the ideal heating types for various dishes. The temperature and cooking time depend on the amount and composition of the food. Setting ranges are indicated for this reason. Try using the lower values at first. A lower temperature results in more even browning. You can use a higher setting next time if necessary.

The setting values apply to dishes placed into a cold cooking compartment. If you preheat the oven, the indicated cooking times will be reduced by several minutes.

If you wish to follow one of your own recipes when cooking, you can use similar dishes in the table as a reference.

Types of heating used:

- Hot air
- Top/bottom heating
- Circo-roasting
- Circotherm intensive
- Full-surface grill
- Microwave

Dish	Accessories/cookware	Shelf position	Type of heating	Temperature in °C	MW power in watts	Cooking time in mins.
Vegetables, fresh						
Vegetables, fresh, 250 g*	Cookware, covered	1		-	600	8-12
Vegetables, fresh, 500 g*	Cookware, covered	1		-	600	10-15
Vegetables, frozen						
Spinach, 450 g*	Cookware, covered	1		-	600	13-18
Mixed vegetables, 250 g + 25 ml water*	Cookware, covered	1		-	600	10-14
Mixed vegetables, 500 g + 25 ml water*	Cookware, covered	1		-	600	15-20
* Stir once or twice while cooking						

Dish	Accessories/cookware	Shelf position	Type of heating	Temperature in °C	MW power in watts	Cooking time in mins.
Vegetable dishes						
Grilled vegetables	Universal pan	3		290	-	10-15
Potatoes						
Baked potatoes, halved	Universal pan	1		160-180	-	45-60
Baked potatoes, halved, 1 kg	Universal pan	2		200-220	360	15-20
Unpeeled potatoes, whole, 250 g*	Cookware, covered	1		-	600	10-13
Boiled potatoes, quartered, 500 g*	Cookware, covered	1		-	600	12-15
Potato products, frozen						
Potato rösti (turn during cooking)	Universal pan	2		200-220	-	20-30
Potato pockets, filled (turn during cooking)	Universal pan	2		190-210	-	15-25
Croquettes	Baking tray	1		200-220	-	15-25
Chips (turn during cooking)	Baking tray	1		190-210	-	20-30
Chips, 500 g	Universal pan	2		250-270	180	15-20
Chips, 2 levels (turn during cooking)	Universal pan + baking tray	3+1		200-220	-	30-40
Rice						
Long-grain rice, 250 g + 500 ml water	Cookware, covered	1		-	600	7-9
					180	13-16
Brown rice, 250 g + 650 ml water	Cookware, covered	1		-	600	11-13
					180	25-30
Risotto, 250 g + 900 ml water	Cookware, covered	1		-	600	12-14
					180	22-27
Cereals						
Couscous, 250 g + 500 ml water	Cookware, covered	1		-	600	6-8
Millet, whole, 250 g + 600 ml water	Cookware, covered	1		-	600	8-10
					180	10-15
Polenta/corn semolina, 125 g + 500 ml water*	Cookware, covered	1		-	600	6-8
Pearl barley, 250 g + 750 ml water	Cookware, covered	1		-	600	11-13
					180	15-20
Egg						
Egg custard with 2 eggs	Cookware, covered	1		-	360	6-8

* Stir once or twice while cooking

Dessert

You can prepare yogurt and various desserts using your appliance.

When preparing food in a microwave, always use cookware which is heat-resistant and suitable for microwave use. Observe the notes on cookware suitable for microwaves. ⟶ *"Microwave" on page 17*

If you place your cookware onto the wire rack, slide the wire rack in with the imprint "Microwave" facing the appliance door and the outer rail facing downwards.

Making yoghurt

Remove accessories and shelf supports from the cooking compartment. The cooking compartment must be empty. Do not open the appliance door while the appliance is in operation.

1. Heat 1 litre of milk (3.5% fat) to 90 °C on the hob and then leave it to cool down to 40 °C.
   It is sufficient to heat UHT milk to 40 °C.
2. Stir in 150 g (chilled) yoghurt.
3. Pour into cups or small jars and cover with cling film.
4. Place the cups or jars onto the cooking compartment floor and use the settings indicated in the table.
5. After making the yoghurt, leave it to cool in the refrigerator.

Custard made from custard powder

Mix custard powder with milk and sugar in a tall, microwave-suitable container according to the information on the packaging. Use the settings indicated in the table.

As soon as the milk starts to rise, stir thoroughly. Repeat this step two to three times.

Making rice pudding

1. Weigh the rice and add 4 times as much milk.
2. Pour the rice and milk into a tall container which is suitable for microwave use.
3. Use the settings indicated in the table.
4. As soon as the milk starts to rise, stir thoroughly and reduce the microwave power as indicated in the table.
   Stir several times whilst it continues to cook.

Compote

Weigh the fruit in a microwave-suitable container and add a tablespoon of water for every 100 g. Add sugar and spices according to taste. Cover the container and use the settings indicated in the table.

Stir two to three times during the cooking time.

Microwave popcorn

Use flat, heat-resistant glass cookware, e.g. the lid of an ovenproof dish. Do not use porcelain or heavily curved plates.

Place the popcorn bag onto the cookware with the labelled side facing downwards. Use the settings indicated in the table. The time may need to be adjusted, depending on the product and quantity in question.

Remove the popcorn bag after 1½ minutes and shake it to ensure that the popcorn doesn't burn. Wipe the cooking compartment clean after preparation.

⚠ Warning – Risk of burns!
Airtight packaging may burst when food is heated. Always observe the instructions on the packaging. Always use oven gloves to remove dishes from the cooking compartment.

Recommended setting values

Types of heating used:
- Dough proving
- Microwave

Dish	Accessories/cookware	Shelf position	Type of heating	Temperature in °C	MW power in watts	Cooking time in mins.
Custard made from custard powder*	Cookware, covered	1		-	600	5-8
Yogurt	Individual moulds	Cooking compartment floor		40-45	-	8-9h
Rice pudding, 125 g + 500 ml milk*	Cookware, covered	1		-	600	10
					180	20-25
Fruit compote, 500 g	Cookware, covered	1		-	600	9-12
Microwave popcorn, 1 bag 100 g each**	Cookware, uncovered	1		-	600	4-6

* Stir once or twice while cooking
** Place sealed bag on cookware

Eco heating functions

Hot air eco and Top/bottom heating eco are intelligent heating functions that allow you to gently cook meat, fish and baked items. The appliance optimally controls the supply of energy to the cooking compartment.The food is cooked in phases using residual heat. This means that it remains more succulent and browns less. Depending on the method of preparation and the type of food, it is possible to save energy. If you open the appliance door before the food has finished cooking or if you preheat the appliance, you may not be able to achieve this result.

Only use genuine accessories for your appliance. These have been tailored to the cooking compartment and the operating modes of your appliance.Remove any accessories that are not being used from the cooking compartment.

Place the food into the empty cooking compartment before the oven is heated up. For Hot air eco, select a temperature of between 125 and 275 °C, and for Top/bottom heating eco, select a temperature of between 150 and 250 °C. Always keep the appliance door closed when cooking. Only cook on one level when using this function.

The Hot air eco heating function is used to measure both the energy consumption in air recirculation mode and the energy efficiency class. The Top/bottom heating eco heating function is used to measure the energy consumption in the conventional mode.

Accessories

Ensure that you always use suitable accessories and that they are placed in the oven the right way around.

Wire rack
Slide the wire rack in with the embossed "microwave" facing the appliance door, and the curved lip pointing downwards. Always place ovenware, tins and dishes on the wire rack.

Universal pan or baking tray
Slide the universal pan or the baking tray in carefully as far as the limit stop with the bevelled edge facing the appliance door.

Baking tins and cookware
Dark- coloured metal baking tins are most suitable. These allow you to make energy savings of up to 35 per cent.

Cookware made from stainless steel or aluminium reflects heat like a mirror. Non-reflective cookware made from enamel, heat-resistant glass or coated, die-cast aluminium is more suitable.

Tinplate baking tins, ceramic dishes or glass dishes prolong baking time, and the cake will not brown so evenly.

Greaseproof paper
Only use greaseproof paper that is suitable for the selected temperature. Always cut greaseproof paper to size.

Recommended setting values

Here, you can find specifications for various dishes. The temperature and baking time depend on the consistency and amount of the dough. Settings ranges are indicated for this reason. Try with the lower values first. A lower temperature results in more even browning. You can increase the temperature next time if necessary.

Note: Baking times can not be reduced by using higher temperatures. Cakes or baked items would only be cooked on the outside, but would not be fully cooked in the middle.

Types of heating used:
- eco Hot air Eco
- eco Top/bottom heating Eco

Dish	Accessories/cookware	Shelf position	Type of heating	Temperature in °C	Cooking time in mins.
Cakes in tins					
Sponge cake in a tin	Ring tin/cake tin	1	eco	140-160	60-80
Sponge flan base	Flan base tin	1	eco	140-160	20-40
Sponge base, 2 eggs	Flan base tin	1	eco	150-170	20-30
Sponge flan, 3 eggs	Springform cake tin, diameter 26 cm	1	eco	160-170	25-35
Sponge flan, 6 eggs	Springform cake tin, diameter 28 cm	1	eco	150-160	50-60
Bundt yeast cake	Bundt cake tin	1	eco	150-160	65-75
Cakes on baking trays					
Sponge cake with dry topping	Baking tray	1	eco	160-180	20-40
Shortcrust tart with dry topping	Baking tray	1	eco	170-180	25-35
Plaited loaf, savarin	Baking tray	1	eco	150-160	35-45
Yeast cake with dry topping	Baking tray	1	eco	150-170	20-35
Small baked items					
Muffins	Muffin tray	2	eco	160-180	15-30

Dish	Accessories/cookware	Shelf position	Type of heating	Temperature in °C	Cooking time in mins.
Small cakes	Baking tray	1	eco	150-160	25-35
Puff pastry	Baking tray	2	eco	170-190	25-50
Choux pastry	Baking tray	1	eco	200-220	35-45
Biscuits	Baking tray	2	eco	140-160	15-30
Whirls	Baking tray	2	eco	140-150	25-40
Small yeast cakes	Baking tray	1	eco	150-160	30-40
Bread and bread rolls					
Multigrain bread, 1.5 kg	Cake tin	1	eco	200-210	35-45
Flatbread	Universal pan	1	eco	250-270	15-20
Bread rolls, sweet, fresh	Baking tray	1	eco	170-190	15-20
Bread rolls, fresh	Baking tray	1	eco	180-200	25-35
Meat					
Joint of pork without rind, e.g. neck, 1.5 kg	Cookware, uncovered	1	eco	180-190	120-140
Pot-roasted beef, 1.5 kg	Cookware, covered	1	eco	200-220	140-160
Joint of veal, 1.5 kg	Cookware, uncovered	1	eco	170-180	110-130
Fish					
Fish, braised, whole 300 g, e.g. trout	Cookware, covered	1	eco	190-210	25-35
Fish, braised, whole 1.5 kg, e.g. salmon	Cookware, covered	1	eco	190-210	45-55
Fish fillet, plain, braised	Cookware, covered	1	eco	190-210	15-35

Acrylamide in foodstuffs

Acrylamide is mainly produced in grain and potato products prepared at high temperatures, such as potato crisps, chips, sliced bread, bread rolls, bread or fine baked goods (biscuits, gingerbread, spiced biscuit).

Tips for keeping acrylamide to a minimum	
General	■ Keep cooking times as short as possible. ■ Cook food until it is golden brown, but not too dark. ■ Large, thick pieces of food contain less acrylamide.
Baking	With top/bottom heating at max. 200 °C. With hot air at max. 180 °C.
Biscuits	With top/bottom heating at max. 190 °C. With hot air at max. 170 °C. Egg or egg yolk reduces the production of acrylamide.
Oven chips	Spread out a single layer evenly on the baking tray. Cook at least 400 g at once on a baking tray so that the chips do not dry out.

Slow cook

Slow cooking is a technique for cooking food over a long period at low temperatures. For this reason, it is also called "low-temperature cooking".

Slow cooking is ideal for all prime cuts (e.g. tender portions of beef, veal, pork, lamb or poultry) which are to be cooked "à point". The meat will remain succulent and tender.

The benefit of this cooking method is that it allows lots of scope for menu planning because slow-cooked meat is easy to keep warm. You do not have to turn the meat when cooking. Keep the appliance door closed in order to maintain an even cooking climate.

Only use fresh, clean and hygienic meat without bones. Carefully remove sinews and fat from around the edge. Fat develops a strong, distinct flavour during slow cooking. You can also use seasoned or marinated meat. Do not use defrosted meat.

Meat can be carved immediately following slow cooking. No standing time is required. Due to the special cooking method, the meat looks pink, but is not raw or undercooked.

Note: Delayed-start operation with an end time is not possible for the slow cooking heating type.

Cookware

Use flat cookware, e.g. a glass/porcelain serving dish. Place the cookware into the cooking compartment to preheat it.

Always place the uncovered cookware onto the wire rack at level 1.

You can find additional information in the tips on slow cooking attached to the settings table.

Your appliance features the heating type "Slow cook". Only start operation when the cooking compartment has fully cooled down. Allow the cooking compartment to warm up for around 10 minutes with the cookware inside.

Sear the meat on the hotplate at a very high heat and for a sufficiently long time on all sides, even on the ends. Place into the preheated cookware right away. Place the cookware containing the meat into the cooking compartment once again and cook slowly.

Recommended setting values

The slow cooking temperature and cooking time are dependent on the size, thickness and quality of the meat. Different settings ranges are indicated for this reason.

Type of heating used:
- Low temperature cooking

Dish	Cookware	Shelf position	Heating function	Searing time in mins	Temperature in °C	Cooking time in mins
Poultry						
Duck breast, medium rare, 300 g each	Cookware, uncovered	1		6-8	95*	45-60
Chicken breast fillet, 200 g each, well done	Cookware, uncovered	1		4	120*	45-60
Turkey breast, boned, 1 kg, well done	Cookware, uncovered	1		6-8	120*	100-130
Pork						
Pork tenderloin steak, 5-6 cm thick, 1.5 kg	Cookware, uncovered	1		6-8	85*	130-180
Fillet of pork, whole	Cookware, uncovered	1		4-6	85*	45-70
Beef						
Joint of beef (rump), 6-7 cm thick, 1.5 kg	Cookware, uncovered	1		6-8	100*	150-190
Fillet of beef, 1 kg	Cookware, uncovered	1		4-6	85*	90-120
Sirloin, 5-6 cm thick	Cookware, uncovered	1		6-8	85*	120-180
Beef medallions/rump steak, 4 cm thick	Cookware, uncovered	1		4	85*	40-60
Veal						
Joint of veal, 4-5 cm thick, 1.5 kg	Cookware, uncovered	1		6-8	85*	100-130
Joint of veal, 7-10 cm thick, 1.5 kg	Cookware, uncovered	1		6-8	85*	150-210
Fillet of veal, whole, 800 g	Cookware, uncovered	1		4-6	85*	70-120
Veal medallions, 4 cm thick	Cookware, uncovered	1		4	80*	40-60
Lamb						
Saddle of lamb, boneless, 200 g each	Cookware, uncovered	1		4	85*	30-45
Leg of lamb, boned, medium, 1 kg, tied	Cookware, uncovered	1		6-8	95*	120-180

* Preheat

Tips for slow cooking

Slow-cooking duck breast.	Place the cold duck breast into a pan and fry the skin side first. After slow cooking, grill for 3 to 5 minutes until crispy.
The slow-cooked meat is not as hot as conventionally roasted meat.	So that the roasted meat does not cool so quickly, warm the plates and serve the sauces very hot.

Drying

You can achieve outstanding drying results with Hot air. With this type of preserving, flavourings are concentrated by the dehydration.

Only use unblemished fruit, vegetables and herbs and wash them thoroughly. Line the wire rack with greaseproof paper or parchment paper. Drain the excess water from the fruit and dry it.

If necessary, cut it into equal chunks or thin slices. Place unpeeled fruit onto the dish with the sliced surfaces facing upwards. Ensure that neither fruit nor mushrooms overlap on the wire rack.

Grate vegetables and then blanch them. Allow the blanched vegetables to drain off and distribute them evenly on the wire rack.

Dry herbs on the stem. Position the herbs evenly and slightly heaped on the wire rack.

Use the following shelf positions for drying:
- 1 wire rack: Level 2
- 2 wire racks: Level 3+1

Turn very juicy fruit and vegetables several times. After drying, remove the dried products from the paper immediately.

Recommended setting values

In the table, you can find settings for drying various foodstuffs. The temperature and cooking time are dependent on the type, moisture, ripeness and thickness of the food to be dried. The longer you leave the food to be dried, the better it will be preserved. The thinner the slices are, the quicker the drying process will be and the more aromatic the dried food will remain. Setting ranges are indicated for this reason.

If you wish to dry additional foodstuffs, you should use similar foodstuffs in the table as a reference.

Type of heating used:
- Hot air

Dish	Accessories	Shelf position	Type of heating	Temperature in °C	Cooking time in hours
Pomes (apple rings, 3 mm thick, 200 g per wire rack)	Wire rack	2		80	4-7
Stone fruit (plums)	Wire rack	2		80	8-10
Root vegetables (carrots), grated, blanched	Wire rack	2		80	4-7
Sliced mushrooms	Wire rack	2		60	6-8
Herbs, washed	1-2 wire racks	-		60	2-6

Preserving

You can preserve fruit and vegetables using your appliance.

⚠ Warning – Risk of injury!
If the food is preserved incorrectly, the preserving jars may burst. Follow the instructions for preserving.

Jars

Use only clean and undamaged preserving jars. Only use heat-resistant, clean and undamaged rubber rings. Check clips and clamps in advance.

For each preserving process, only use preserving jars that are the same size and contain the same food. In the cooking compartment, you can preserve the contents of a maximum of six ½, 1 or 1½-litre preserving jars at the same time. Do not use jars that are larger or taller than this. The lids could rupture.

Preserving jars must not touch one another in the cooking compartment during the preserving process.

Preparing fruit and vegetables

Only use fruit and vegetables that are in good condition. Wash them thoroughly.

Peel, core and chop fruit and vegetables appropriate to their type and fill the preserving jars with them up to approx. 2 cm below the rim.

Fruit
Fill the preserving jars with the fruit along with a hot, skimmed sugar solution (approx. 400 ml for a 1-litre jar). For one litre of water:
- Approx. 250 g sugar for sweet fruit
- Approx. 500 g sugar for sour fruit

Vegetables
Fill the jars with the vegetables along with hot, boiled water.

Wipe the rims of the jars, as they must be clean. Place a damp rubber ring and a lid on each jar. Seal the jars with clamps. Place the jars into the universal pan so that they do not touch each other. Pour 500 ml hot water (approx. 80 °C) into the universal pan. Use the settings indicated in the table.

Ending the preserving process

Fruit
After a short while, small bubbles will form at short intervals. Switch off the appliance once all preserving jars are bubbling. Remove the jars from the cooking compartment after the indicated cooling time.

Vegetables
After a short while, small bubbles will form at short intervals. As soon as all preserving jars are bubbling, reduce the temperature to 120 °C and allow the jars to continue to bubble in the closed cooking compartment as indicated in the table. After this time has elapsed,

switch off the appliance and make use of the residual heat for several minutes as indicated in the table.

After preserving, remove the jars from the cooking compartment and place them onto a clean cloth. Do not place these hot jars onto a cold or damp surface, as they may crack. Cover the preserving jars to protect them from draughts. Only remove the clamps once the jars are cold.

Recommended setting values

The indicated times in the settings table are average values for preserving fruit and vegetables. They may be influenced by room temperature, the number of jars, quantity, heat and quality of the jar contents. The specifications are based on 1-litre round jars. Before you switch off the appliance or change the cooking mode, check whether the contents of the jars are bubbling as they should. The bubbling process starts after approx. 30-60 minutes.

Type of heating used:
- Hot air

Dish	Cookware	Shelf position	Type of heating	Temperature in °C	Cooking time in mins.
Preserving					
Vegetables, e.g. carrots	1-litre preserving jars	1		160-170	Before it starts bubbling: 30-40
				120	When it starts to bubble: 30-40
				-	Residual heat: 30
Vegetables, e.g. cucumbers	1-litre preserving jars	1		160-170	Before it starts bubbling: 30-40
				-	Residual heat: 30
Stone fruit, e.g. cherries, damsons	1-litre preserving jars	1		160-170	Before it starts bubbling: 30-40
				-	Residual heat: 35
Pomes, e.g. apples, strawberries	1-litre preserving jars	1		160-170	Before it starts bubbling: 30-40
				-	Residual heat: 25

Allowing the dough to prove at dough proving setting

Yeast dough will prove considerably more quickly using the "Dough proving" heating type than at room temperature and does not dry out. Only start operation when the cooking compartment has fully cooled down.

Always allow yeast dough to prove twice. Observe the specifications in the settings tables for the 1st and 2nd proving processes (dough fermentation and final fermentation).

Dough fermentation
Pour 200 ml water onto the cooking compartment floor for the dough fermentation.

Caution!
Surface damage
- Never pour water into the hot cooking compartment. The temperature change can cause damage to the enamel.
- Do not use distilled water. Use tap water only.

Place the dough into a heat-resistant bowl and place it onto the wire rack. Use the settings indicated in the table.

Do not open the appliance door during the proving process, as moisture will escape. Do not cover the dough.

Condensation builds during operation which steams up the door pane. Wipe out the cooking compartment after dough proving. Loosen any limescale with a little vinegar and wipe with clean water.

Final fermentation
Place your baked item into the oven at the shelf position indicated in the table.

If you want to preheat the oven, the final fermentation takes place outside the appliance in a warm place.

Recommended setting values

The temperature and proving time are dependent on the type and quantity of the ingredients. The values in the table are therefore only meant to be average values.

Type of heating used:
- Dough proving

Dish	Accessories/cookware	Shelf position	Type of heating	Temperature in °C	Cooking time in mins.
Yeast dough, light	Bowl	1		35-40	25-30
	Baking tray	1		35-40	10-20
Yeast dough, heavy and rich	Bowl	1		35-40	20-40
	Baking tray	1		35-40	15-25

Defrosting

Use the "Microwave" operation mode to defrost frozen fruit, vegetables, poultry, meat, fish and baked items.

Remove the frozen food from its packaging and place it onto the wire rack in cookware suitable for microwave use. Observe the notes on cookware suitable for microwaves. → *"Microwave" on page 17*

Slide the wire rack in with the imprint "Microwave" facing the appliance door and the outer rail facing downwards.

Remove unused accessories from the cooking compartment. This will allow you to achieve optimum cooking results and save energy.

Recommended setting values

The times in the table are average values. They are dependent on the quality, freezing temperature (-18 °C) and composition of the food. Time ranges are indicated. Set the shortest time first and then extend the time if necessary. You can often achieve better results when defrosting in several steps. These are indicated one below the other in the table.

Tip: Items which were frozen flat or portioned defrost faster than those frozen in a block.

Stir the food or turn it once or twice in between. Large pieces of food should be turned several times. Occasionally split the food or remove items which have already defrosted from the cooking compartment.

Leave the defrosted food to rest for another 10 to 30 minutes in the appliance whilst it is switched off, so that the temperature balances out.

Tip: If you have quantities other than those indicated in the settings table, this basic rule will help: double the quantity equates to roughly double the cooking time.

Type of heating used:
- Microwave

Dish	Accessories/cookware	Shelf position	Type of heating	Temperature in °C	MW power in watts	Cooking time in mins.
Bread, bread rolls						
Bread, 500 g	Cookware, uncovered	1		-	180	3
				-	90	10-15
Bread rolls	Wire rack	1		140-160	90	2-4
Cake						
Cake, moist, 500 g	Cookware, uncovered	1		-	180	2
				-	90	10-15
Cake, dry, 750 g	Cookware, uncovered	1		-	90	10-15
Meat and poultry						
Chicken, whole, 1.2 kg*	Cookware, uncovered	1		-	180	10
				-	90	10-15
Poultry portions, 250 g*	Cookware, uncovered	1		-	180	10
				-	90	10-15
Duck, 2 kg*	Cookware, uncovered	1		-	180	10
				-	90	40-50
Whole pieces of meat, e.g. joint (raw meat), 800 g	Cookware, uncovered	1		-	180	15
				-	90	10-15
Whole pieces of meat, e.g. joint (raw meat), 1 kg*	Cookware, uncovered	1		-	180	15
				-	90	20-30
Whole pieces of meat, e.g. joint (raw meat), 1.5 kg*	Cookware, uncovered	1		-	180	15
				-	90	25-35
Meat, in pieces or slices, e.g. goulash (raw meat), 500 g*	Cookware, uncovered	1		-	180	8
				-	90	5-10
Minced meat, mixed, 200 g*	Cookware, uncovered	1		-	90	8-15
Minced meat, mixed, 500 g*	Cookware, uncovered	1		-	180	5
				-	90	10-15

* Turn halfway through cooking time

Dish	Accessories/cookware	Shelf position	Type of heating	Temperature in °C	MW power in watts	Cooking time in mins.
Minced meat, mixed, 1000 g*	Cookware, uncovered	1		-	180	10
				-	90	20-30
Fish						
Fish, whole, 300 g*	Cookware, uncovered	1		-	180	3
				-	90	10-15
Fish fillet, 400 g*	Cookware, uncovered	1		-	180	5
				-	90	10-15
Fruit, vegetables						
Berries, 300 g	Cookware, uncovered	1		-	180	5-10
Vegetables, 600 g	Cookware, uncovered	1		-	180	10
				-	90	8-13
Miscellaneous						
Defrosting butter, 125 g	Cookware, uncovered	1		-	90	7-9

* Turn halfway through cooking time

Heating food in a microwave

Using the microwave, you can heat food, or defrost and heat it in a single step.

Take ready-to-eat meals out of the packaging. The food will heat up more quickly and evenly in cookware that is suitable for microwaves. The various components of a dish may require different times to heat up.

Food which lies flat will cook more quickly than food which is piled high. Arrange the food as flat as possible in the cookware for this reason. Food should not be vertically stacked.

Cover the food. This will ensure better cooking results. If you do not have a lid that fits your cookware, use a plate or microwave film for this purpose.

Stir food two to three times during cooking and turn it if necessary. After heating food up, leave it to rest for 1 to 2 minutes to compensate for the temperature difference.

If you are heating up baby food, place the bottle onto the wire rack without the teat or the lid. After heating up, shake well or stir and be sure to check the temperature.

The food transfers heat to the cookware. It can become very hot when only using the microwave for preparation.

Tip: If you have quantities other than those indicated in the settings table, this basic rule will help: double the quantity equates to roughly double the cooking time.

⚠ Warning – Risk of scalding!
There is a possibility of delayed boiling when a liquid is heated. This means that the liquid reaches boiling temperature without the usual steam bubbles rising to the surface. Even if the container only vibrates a little, the hot liquid may suddenly boil over and spatter. When heating, always place a spoon in the container. This will prevent delayed boiling.

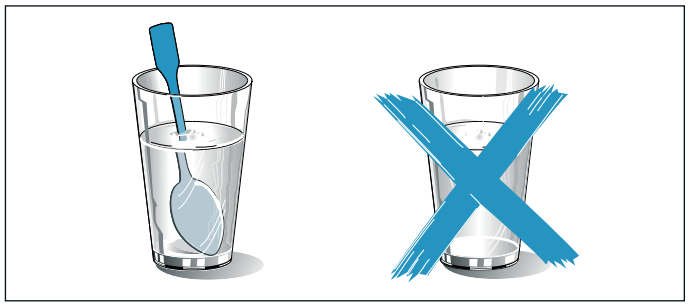

Caution!
Creation of sparks: Metal – e.g. a spoon in a glass – must be kept at least 2 cm from the cooking compartment walls and the inside of the door. Sparks can irreparably damage the glass on the inside of the door.

Recommended setting values

In the table, you can find the setting values for heating various drinks and foodstuffs up in the microwave. The times specified are only average values. These depend on the cookware used, the quality, temperature and composition of the food in question. Time ranges are indicated. Set the shortest time first and then extend the time if necessary.

The values in the table apply to food placed into a cold cooking compartment.

If no values are indicated for your food, use similar foods in the table as orientation.

Remove any accessories from the cooking compartment which are not being used. This will ensure optimum cooking results and will also save energy.

Wipe the cooking compartment clean after cooking.

Type of heating used:

- Microwave

Dish	Cookware	Shelf position	Type of heating	Temperature in °C	MW power in watts	Cooking time in mins.
Heating drinks						
200 ml (stir well)	Cookware, uncovered	1		-	max	1-3
400 ml (stir well)	Cookware, uncovered	1		-	max	2-6
Heating baby food						
Baby bottles, 150 ml (stir well)	Cookware, uncovered	1		-	360	1-3
Vegetables, chilled						
250 g	Cookware, covered	1		-	600	3-8
Vegetables, frozen						
loose, 250 g	Cookware, covered	1		-	600	8-12
Creamed spinach, frozen block, 450 g	Cookware, covered	1		-	600	11-16
Dishes, chilled						
Plated meal, 1 portion	Cookware, covered	1		-	600	4-8
Soup, stew, 400 ml	Cookware, covered	1		-	600	5-7
Side dishes, e.g. pasta, dumplings, potatoes, rice	Cookware, covered	1		-	600	5-10
Bakes, 400 g, e.g. lasagne, potato gratin	Cookware, uncovered	1		-	600	5-10
Dishes, frozen						
Plated meal, 1 portion	Cookware, covered	1		-	600	11-15
Soup, stew, 200 ml (stir well)	Cookware, covered	1		-	600	4-6
Side dishes, 500 g, e.g. pasta, dumplings, potatoes, rice	Cookware, covered	1		-	600	7-10
Bakes, 400 g, e.g. lasagne, potato gratin	Cookware, uncovered	1		180-200	180	20-25

Keeping warm

You can keep cooked dishes warm using the top/bottom heating type at 70 °C. This will avoid condensation developing, and means you will not have to wipe out the cooking compartment.

Do not keep cooked dishes warm for longer than two hours. Be aware that some dishes may continue cooking whilst being kept warm. Cover the dishes if necessary.

Test dishes

These tables have been produced for test institutes to facilitate the inspection of the appliance.

As per EN 60350-1:2013 and IEC 60350-1:2011 and as per standard EN 60705:2012, IEC 60705:2010.

Baking

Baked items that are placed into the oven on trays or in baking tins/dishes at the same time will not necessarily be ready at the same time.

Shelf positions for baking on two levels:
- Universal pan: Level 3
  Baking tray: Level 1

Apple pie
Apple pie on one level: place dark-coloured springform cake tins diagonally next to each other.

Cakes in tinplate springform cake tins: bake on one level with top/bottom heating. Place the springform cake tin onto the universal pan instead of onto the wire rack.

Fatless sponge cake
Fatless sponge cake on two levels: vertically stack springform cake tins in an offset manner on the wire racks.

Notes
- The setting values apply to dishes placed into a cold cooking compartment.
- Please note the information in the tables about preheating. The setting values are valid without rapid heating-up.
- For baking, use the lower of the indicated temperatures first.

Types of heating used:
- Hot air
- Top/bottom heating
- Circotherm intensive

Dish	Accessories/cookware	Shelf position	Type of heating	Temperature in °C	Cooking time in mins.
Baking					
Shortbread	Baking tray	1		150-160*	20-30
Shortbread	Baking tray	1		140-150*	25-35
Small cakes	Baking tray	1		160*	25-35
Small cakes	Baking tray	1		150*	20-30
Small cakes, 2 levels	Universal pan + baking tray	3+1		140*	30-40
Fatless sponge cake	Springform cake tin, diameter 26 cm	1		160-170**	25-35
Fatless sponge cake	Springform cake tin, diameter 26 cm	1		160-170**	30-45
Apple pie	2 x black plate tins, diameter 20 cm	1		180-200	60-70
Apple pie	2 x black plate tins, diameter 20 cm	1		170-180	60-80

* Preheat for 5 mins, do not use quick heat function
** Preheat, do not use quick heat function

Grilling

Also slide in the universal pan. The liquid will be caught and the cooking compartment stays cleaner.

Type of heating used:
- Full-surface grill

Dish	Accessories	Shelf position	Type of heating	Temperature in °C	Cooking time in mins.
Grilling					
Browning toast	Wire rack	3		290	3-6
Beefburger, 12 pieces*	Wire rack	2		290	20-30

* Turn after 2/3 of the total time

Preparing food with a microwave

When preparing food in a microwave, always use heat-resistant cookware that is suitable for microwave use. Observe the notes on cookware suitable for microwaves. → *"Microwave" on page 17*

When you place your cookware onto the wire rack, slide the wire rack in with the embossed "microwave" facing the appliance door, and the curved lip pointing downwards.

Note: To test in microwave mode only, switch off the drying function in the basic settings. → *"Basic settings" on page 20*

Types of heating used:
- Hot air
- Circo-roasting
- Microwave

Dish	Accessories/cookware	Shelf position	Type of heating	Temperature in °C	MW power in watts	Cooking time in mins.
Microwave defrosting						
Meat	Cookware, uncovered	1		-	180	5
					90	10-15
Microwave cooking						
Egg wash	Cookware, uncovered	1		-	360	20
					180	20-25
Sponge flan	Cookware, uncovered	1		-	600	7-9
Meat loaf	Cookware, uncovered	1		-	600	22-27
Combined microwave cooking						
Potato gratin	Cookware, uncovered	1		150-170	360	25-30
Cake	Cookware, uncovered	1		190-210	180	12-18
Chicken*	Cookware, uncovered	1		180-200	360	25-35

* Turn after 2/3 of the total time

REGISTER YOUR PRODUCT
ONLINE NEFF-HOME.COM

Constructa NEFF Vertriebs-GmbH |
Carl-Wery-Straße 34 | 81739 Munich | Germany

9001585462
001012
en