N 70, BUILT-IN OVEN WITH ADDED STEAM FUNCTION, 60 X 60 CM, STAINLESS STEEL
B47VR32N0B

A+

Built-in oven with VarioSteam® and SLIDE&HIDE® - fuller flavour and unrestricted access to the oven interior

- √ Slide&Hide® – The fully disappearing oven door with rotating handle.
- √ CircoTherm® – Smart hot-air solution that lets you bake on up to four levels.
- √ Vario Steam – Cooks food moist on the inside and crisp on the outside.
- √ Eco Clean with Base Clean - the duo that makes oven cleaning easier
- √ Shift Control - fast navigation through menus and simple operation with the TFT display.

2 x combination grid, 1 x universal pan

Z11AB15A0 Baking tray, non-stick ceramic coated, Z11AU15A0 Universal pan, non-stick ceramic coated, Z11CG10X0 Barbecue-Set, Z11CR10X0 Baking and roasting grid (standard), Z11GT10X3 Glass roasting dish, 5,4l, Z11GU20X0 Glasspan, Z11SZ00X0 SeamlessCombination mounting kit, Z11SZ80X0 SeamlessCombination 60 + 29cm, Z11SZ90X0 SeamlessCombination 60 + 45cm, Z11TC10X0 ComfortFlex Rail (1 level), Z11TC16X0 ComfortFlex Rail (1 level) and racks, Z11TF36X0 3 level telescopic rails, full ext, Z12CB10A0 Baking tray, enamelled, Z12CL10A0 Lid for professional pan, enamelled, Z12CM10A0 Moussaka pan, enamelled, Z12CN10A0 Professional pan, enamelled, Z12CP10A0 Pizza pan, enamelled, Z12CQ10A0 Grill tray, enamelled, Z12CU10A0 Multipurpose pan, enamelled, Z13CR10X0 Baking and roasting grid (steam), Z13CV05S0 Cover Strip, Z1913X0 Baking Stone, Z19DD10X0 Steam set for ovens

Built-in / Free-standing: ..... Built-in
Integrated Cleaning system: ..... EcoClean programme
Min. required niche size for installation (HxWxD): .....585-595 x 560-568 x 550 mm
Dimensions: ..... 595x596x548 mm
Dimensions of the packed product (HxWxD): . 670 x 660 x 700 mm
Control Panel Material: ..... Glass
Door Material: ..... Glass
Net weight: ..... 39.2 kg
Usable volume of cavity: .....71 l
Cooking method: ..... Regeneration, CircoTherm®, Bread Baking Setting, Full width grill, Hot Air-Eco, Half width grill, Conventional heat, Conventional heat ECO, Pizza setting, low temperature cooking, Bottom heat, Hot air grilling, warming
Oven control: ..... electronic
Number of interior lights: 1
Length electrical supply cord: ..... 120.0 cm
EAN code: 4242004181644
Number of cavities (2010/30/EC): 1
Energy efficiency rating: ..... A+
Energy consumption per cycle conventional (2010/30/EC): 0.87 kWh/cycle
Energy consumption per cycle forced air convection (2010/30/EC): ..... 0.69 kWh/cycle
Energy efficiency index (2010/30/EC): .....81.2 %
Connection Rating: .....3450 W
Fuse protection: .....16 A
Voltage: .....220-240 V
Frequency: .....60; 50 Hz
Plug type: ..... no plug (electrical connection by electrician)
Included accessories: .....2 x combination grid, 1 x universal pan

4 242004 181644

N 70, BUILT-IN OVEN WITH ADDED STEAM FUNCTION, 60 X 60 CM, STAINLESS STEEL
B47VR32N0B

Design
- 2.5" TFT colour display
- Cavity inner surface: enamel anthracite
- Illuminated Shift Control
- Slide&Hide® with rotating handle
- We recommend you to choose complementary products within N70, in order to assure an optimal design combination of your Built-In appliances.

Features
- Control panel lock
- Automatic safety switch off Residual heat indicator Start button Door contact switch
- Temperature proposal
- Actual temperature display Heating up indicator automatic programmes:
- Automatic programmes
- LED light, On/off button
- Water tank empty indicator
- Electronic clock timer
- 4 shelf positions

Cleaning
- EcoClean Direct : ceiling, back panel, side liners
- EcoClean programme, Base Clean programme
- Full glass inner door

Programmes/functions
- Additional heating methods with steam: Reheat with steam, Dough proving
- Additional functions:
- De-scaling programme
- Drying function steam cooking function
- Number of automatic programmes: 14 PC
- Rapid heat
- Cooling fan

Accessories
- Available as an accessory
- 1 x universal pan, 2 x combination grid

Performance/technical information
- Energy efficiency rating (acc. EU Nr. 65/2014): A+
- Energy consumption per cycle in conventional mode:0.87 kWh
- Energy consumption per cycle in fan-forced convection mode:0.69 kWh
- Number of cavities: Main cavity Heat source: electrical Cavity volume:71 litre
- 1 l Water tank capacity
- Location of water tank: Outside cavity
- Total connected load electric: 3.45 KW
- 120 cm Cable length
- Nominal voltage: 220 - 240 V
- Appliance dimension (hxwxd): 595 mm x 596 mm x 548 mm
- Niche dimension (hxwxd): 585 mm - 595 mm x 560 mm - 568 mm x 550 mm
- Please refer to the dimensions provided in the installation manual

N 70, BUILT-IN OVEN WITH ADDED STEAM FUNCTION, 60 X 60 CM, STAINLESS STEEL
B47VR32N0B

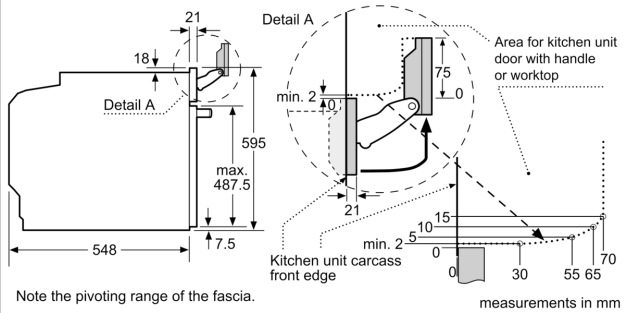

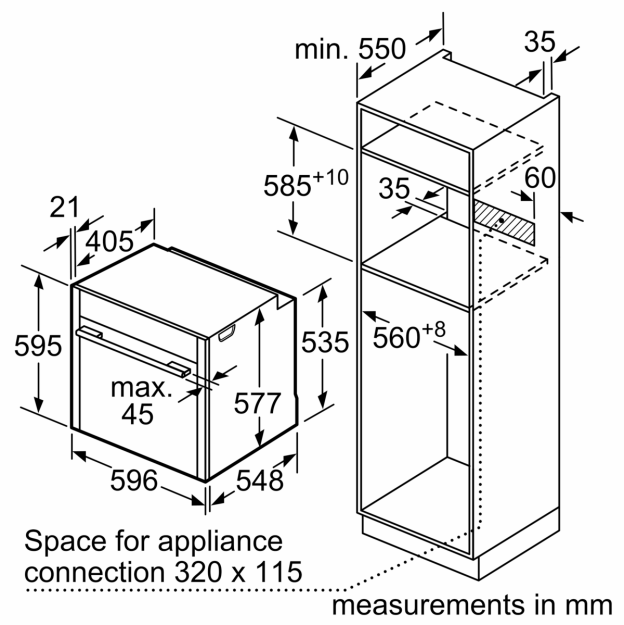

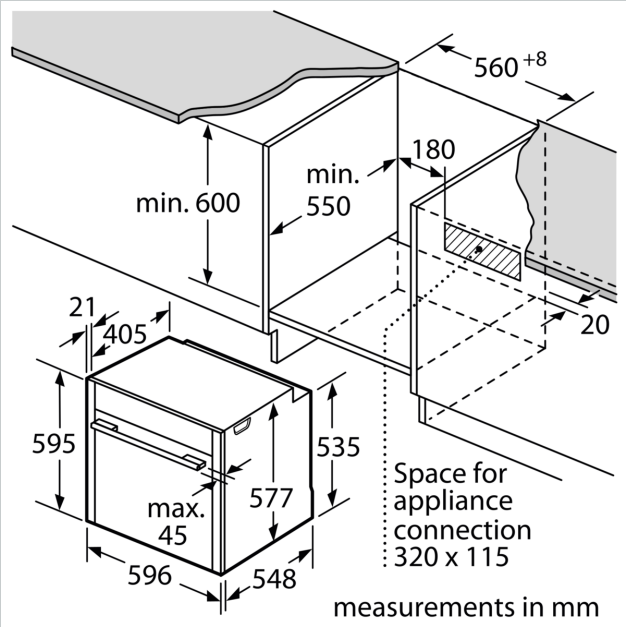

If the appliance will be installed underneath a hob, the following worktop thicknesses (including substructure if necessary) must be taken into account.

Hob type	min. worktop thickness	
	fitted	flush
Induction hob	37 mm	38 mm
Full surface Induction hob	47 mm	48 mm
Gas hob	30 mm	38 mm
Electric hob	27 mm	30 mm