N 90, BUILT-IN FULLY AUTOMATIC COFFEE MACHINE, BLACK, REMOVABLE WATER TANK C17KS61H0

Z6360S0	strip

The built-in coffee center with Home Connect: offers unparalleled variety with highest comfort.

- √ Aroma Double Shot – Strong coffee with less bitterness thanks to two grinding and brewing processes
- √ Home Connect – Discover smart home appliances that make everyday life easier
- √ Intelligent Heater Inside – The Senso Flow System guarantees the right temperature and best aroma
- √ My Coffee – Save your 8 favourite drinks by name – make one with just a click.
- √ One Touch Double Cup – Your choice of espresso or milk drinks with a touch of button – even two cups at once.

Built-in / Free-standing: ..... Built-in
Frothing nozzle: ..... No
Display: ..... No
Water protection system: ..... No
Portion sizes: ..... All cups
Dimensions: ..... 455x596x377 mm
Dimensions of the packed product (HxWxD): . 540 x 478 x 670 mm
Min. required niche size for installation (HxWxD): .449 x 558 x 356 mm
EAN code: 4242004234470
Fuse protection: .....10 A
Voltage: .....220-240 V
Frequency: ..... 50/60 Hz
Plug type: .....Gardy plug w/ earthing

4 242004 234470

N 90, BUILT-IN FULLY AUTOMATIC COFFEE MACHINE, BLACK, REMOVABLE WATER TANK C17KS61H0

Flavour

- "sensoFlow system" - Innovative heating system
- One-touch function for Cappuccino, Espresso Macchiato, Latte Macchiato, white coffee, personalised milk mix beverage
- aromaDouble Shot - Extra strong coffee without compromise in aroma
- Beverage temperature adjustable individually: Coffee: 3 grades, Hot water: 4 grades

Convenience

- TFT display with interactive menu
- 8 personalised beverages Save 8 favourite beverages with individual names and adjustable mixing ratio of milk and espresso
- Cappuccino: Prepare two cups simultaneously for all coffee varieties
- Removable 2.4 litre water tank
- Early warning when bean container or water tank are close to empty

Performance

- "silent ceram drive" - Premium ceramic grinding unit
- Coffee Sensor Pro: The grinding unit automatically adjusts to bean variety
- One-touch coffee milk specialities with especially fine-pored milk froth thanks to an innovative milk frother
- In addition to beverages also available separately: milk foam, warm milk, hot water
- Reduced heat up time: fastest first cup
- Water pump with 19 bar pressure
- Separate container for pre-ground coffee

Home Connect

- Discover the new way of controlling home appliances: by app. The Home Connect app allows you to access the appliance from anywhere - at home using WiFi, when away from home using the mobile phone network.
- Remote start: Select and configure beverages in the app, then remotely start the beverage preparation
- CoffeePlaylist: Enter multiple beverage wishes in the app at once, e.g. for visitors; the appliance will then prepare them one after another
- CoffeeWorld: 17 additional international coffee specialties are available in the app - from Australian Flat White to Vienna Melange to Colombian Cortado
- Coffee recipes: The app offers a variety of recipes involving coffee, which can be transferred to the appliance or a Home Connect capable oven - from Espresso Crème brûlée to saddle of venison with coffee crunches
- Coffee know-how: The app includes interesting knowledge around the topic coffee, e.g. bean varieties, harvesting methods or roasting techniques
- User manual: A digital user manual is ready to hand at all times in the app
- Customer service: In case of technical problems, the A04 customer service is able to access the appliance virtually - if you want so
- Security: Security is of top priority at Home Connect. The Home Connect app has been tested and certified by TÜV IT. And the encrypted data transfer via Home Connect protocol protects against unauthorised access.
- The availability of the Home Connect functionality depends on the availability of Home Connect services in your country. Home Connect services are not available in every country – for further information please check www.home-connect.com

Hygiene

- Removable brewing unit: Easy and hygienic cleaning under running water
- steam blast: Fully-automatic steam cleaning of the milk system after every beverage
- All milk nozzle parts are easily removable, separable, easy to clean and dishwasher proof
- Single portion cleaning: Complete emptying of all pipes after each brewing process
- Automatic quick rinse programme when switched on or off
- Removable drip tray including container for coffee grounds
- Fully automatic descaling & cleaning programme
- Display of remaining cups before Decalcification, Cleaning, Change of water filter
- Containers for water, milk and coffee beans are easily accessible but hidden behind a door, so the kitchen always looks clean
- Bean container with aroma preserving lid for up to 500grams
- Adjustable grind settings (multilevel)
- Different display languages available
- Child lock: prevents unintended use of machine
- Wattage: 1600 W

Accessories

- Separate milk container with thermally insulated aluminium housing (0.7 l volume)
- Included accessories: 1 x assembly screws, 1 x scoop, 1 x test strip, 1 x milk container (insulated), 1 x connection hose for milk frother, 1 x milk pipe

N 90, BUILT-IN FULLY AUTOMATIC COFFEE MACHINE, BLACK, REMOVABLE WATER TANK
C17KS61H0

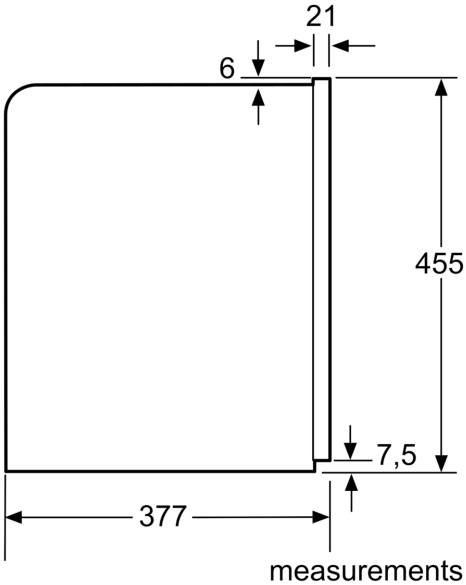

measurements in mm

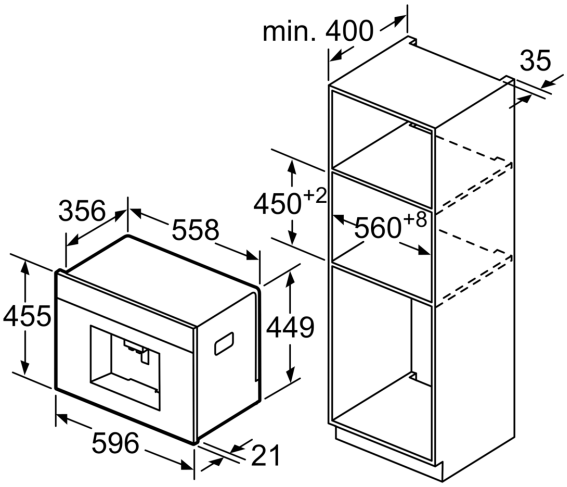

Bean and water containers are removed from the front. Recommended installation height 95-145 cm.

measurements in mm

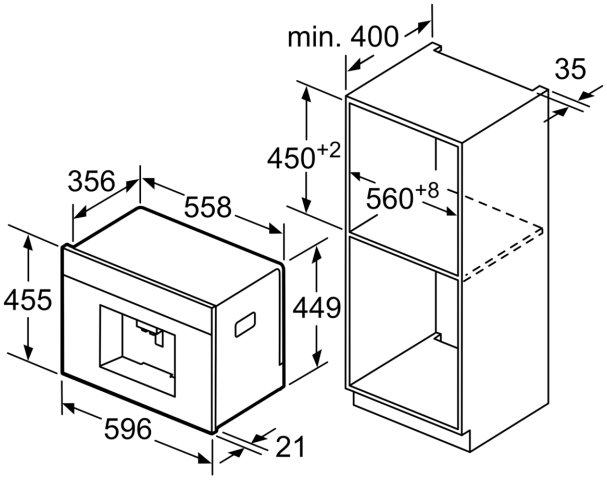

Bean and water containers are removed from the front. Recommended installation height 95-145 cm.

measurements in mm

left corner installation

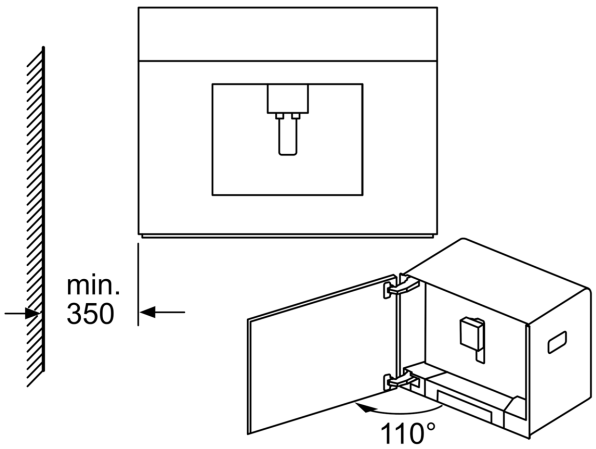

If using the 92° hinge limiter (spare part no. 00636455), the minimum distance to the wall is only 100 mm.

measurements in mm

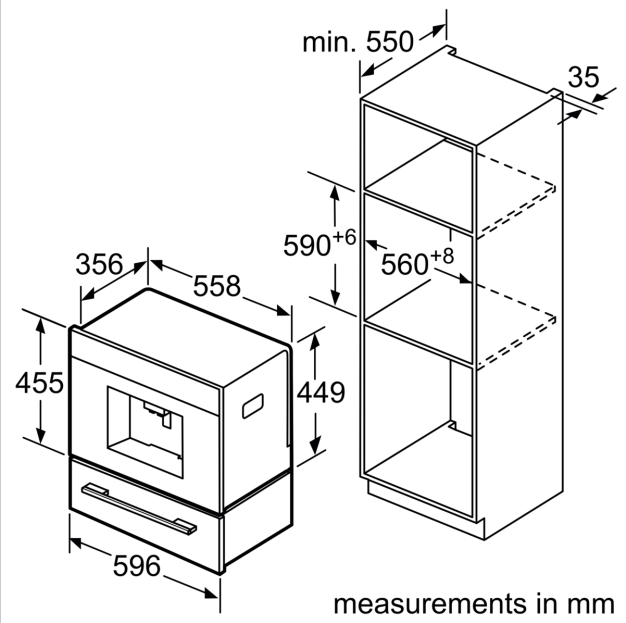
min. 550
35
590+6
560+8
356
558
455
449
596
measurements in mm