N 30, CANOPY COOKER HOOD, 53 CM, SILVER METALLIC
D5655X1GB

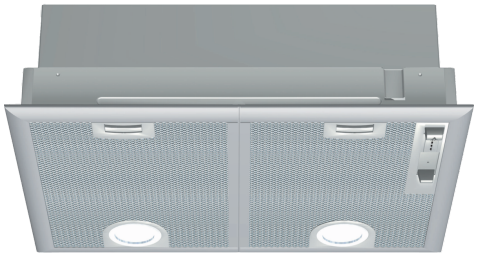

C

Canopy hood: designed to fit neatly under an overhead unit or cabinet. They're discreet and effectively use valuable space.

- √ Intensive speed setting: increases the extraction rate when the steam gets intense
- √ LED Lighting – Clear illumination while you cook.
- √ High extraction rate - for continuously clean air in the kitchen.
- √ Reduced Noise: our optimised motor guarantees a quiet cooking experience.

Z5155X0	Standard odor filter
Z5552X0	Installation kit for canopy

Typology: ..... Built-in/Built-under
Length electrical supply cord: ..... 130.0 cm
Min. required niche size for installation (HxWxD): ..... 255mm x 500.0mm x 350mm mm
Minimum distance above an electric hob: ..... 650 mm
Minimum distance above a gas hob: ..... 650 mm
Net weight: ..... 7.4 kg
Type of control: ..... mechanical
Number of speed settings: ..... 3-stages + intensive setting
Maximum output air extraction: ..... 363 m^3/h
Boost position output recirculating: ..... 395.0 m^3/h
Maximum output recirculating air: ..... 268 m^3/h
Boost position air extraction: ..... 618 m^3/h
Maximum Air flow: ..... 363 m^3/h
Number of lights: 2
Noise level: ..... 56 dB(A) re 1pW
Diameter of air outlet: ..... 120 / 150 mm
Grease filter material: ..... Washable aluminium
EAN code: 4242004237136
Connection Rating: ..... 206 W
Fuse protection: ..... 10 A
Voltage: ..... 220-240 V
Frequency: ..... 50 Hz
Plug type: ..... GB plug
Installation typology: ..... Built-in

4 242004 237136

N 30, CANOPY COOKER HOOD, 53 CM, SILVER METALLIC
D5655X1GB

Key performance features:

- Energy Efficiency Class: C (at a range of energy efficiency classes from A+++ to D)
- Extraction rate according to EN 61591 ø 15 cm:
- max. Normal use362m³/h
- Intensive618 m³/h
- Noise max. Normal Level: Noise, max. speed in normal us: 56 dB dB*

Features

- Slide control operation
- 3 speeds plus intensive
- 2 x LED spot 2.15W (low volt)
- Colour Temperature: 3500 K
- 2 metal grease filter cassettes

Design

- For installation in a chimney or unit, above a hob
- Canopy hood
- Mechanical controls

Performance/technical information

- Suitable for ducted extraction and recirculation
- For recirculated extraction charcoal filter (accessory) needed
- Max. extraction rate: 618 m3/h
- Noise level according to EN 60704-3 and EN 60704-2-13 exhaust air:
- Max. normal use:56dB(A) re 1 pW
- Intensive:68 dB(A) re 1 pW
- Power rating: 206 W
- Light Intensity: 438 lux
- Electrical cable length 1.3 m
- Diameter pipe Ø 150 mm (Ø 120 mm enclosed)
- Dimensions exhaust air (HxWxD): 255-255 x 530 x 380 mm
- Dimensions recirculating (HxWxD): 255-255 x 530 x 380 mm
- Mounting dimensions: width: 50 cm, depth: 35 cm
- Blower Efficiency Class: D*
- Lighting Efficiency Class: A*
- Grease Filtering Efficiency Class: B*
- Average Energy Consumption: 79.8 kWh/year*

Optional accessories

- Recirculating kit Z5155X0

* In accordance with the EU-Regulation No 65/2014

N 30, CANOPY COOKER HOOD, 53 CM, SILVER METALLIC
D5655X1GB

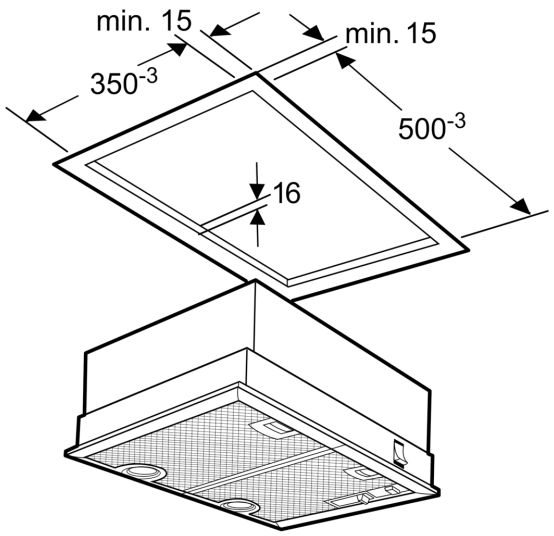

measurements in mm

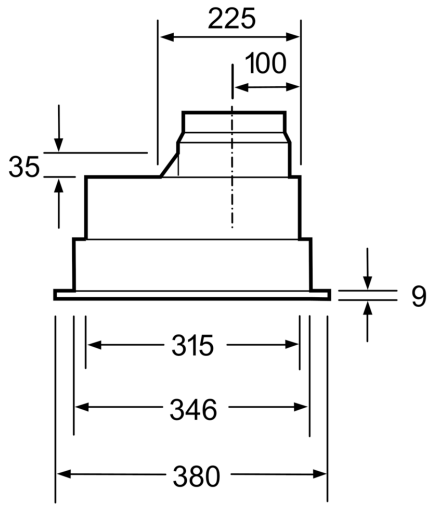

measurements in mm

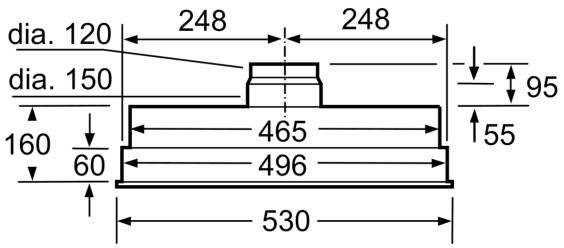

measurements in mm

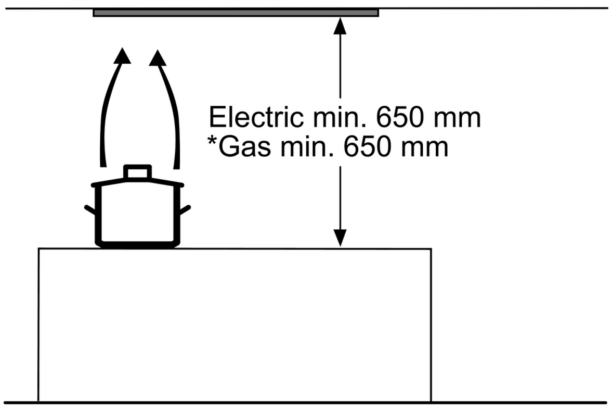

* from upper edge of pan support

measurements in mm