N 30, WALL-MOUNTED COOKER HOOD, 60 CM, CLEAR GLASS
D64ABC0N0B

B

Z5915N0 Chimney extension 1500 mm, Z5860N0 Back panel stainless steel, Z5865N0 Stainless steel back panel 600 mm, Z5905N0 Chimney extension 1000 mm, Z50XXP0X0 Long Life odor filter (replacement), Z51DXA0X0 Standard odor filter (replacement), Z51DXB1X4 Clean Air Standard odor filter (repl.), Z51DXI1X4 Clean Air Standard recirculation kit, Z51DXI1X6 Clean Air Plus recirculation kit, Z51DXU0X0 Standard recirculation kit, Z51FXC1N6 Clean Air Plus recirc. kit external, Z51FXD1N1 Long Life recirculation kit external, Z51FXJ0X0 Long Life recirculation kit, Z53XXB1X6 Clean Air Plus odor filter (replacement)

The curved glass canopy hood combines two design styles: transparent glass as well as the classic box hood design.

- √ LED Lighting – Clear illumination while you cook.
- √ High Extraction Rate – ensures a clear view while cooking thanks to an efficient motor technology

Typology:	Wall-mounted
Length electrical supply cord:	130.0 cm
Height of the chimney:	576-897/576-1007 mm
Height of the appliance:	50 mm
Minimum distance above an electric hob:	550 mm
Minimum distance above a gas hob:	650 mm
Net weight:	16.2 kg
Type of control:	mechanical
Number of speed settings:	3
Maximum output air extraction:	613 m^3/h
Maximum output recirculating air:	422 m^3/h
Maximum Air flow:	613 m^3/h
Number of lights:	2
Noise level:	68 dB(A) re 1pW
Diameter of air outlet:	120 / 150 mm
Grease filter material:	Washable aluminium
EAN code:	4242004222514
Connection Rating:	220 W
Fuse protection:	10 A
Voltage:	220-240 V
Frequency:	50; 60 Hz
Plug type:	GB plug
Installation typology:	Wall-mounted

4 242004 222514

N 30, WALL-MOUNTED COOKER HOOD, 60 CM, CLEAR GLASS
D64ABC0N0B

Key performance features:

- Energy Efficiency Class: B (at a range of energy efficiency classes from A+++ to D)
- Max. extraction rate: 612 m3/h
- Noise max. Normal Level: Noise, max. speed in normal us: 68 dB dB*

Features

- Push button control operation
- 3 power levels
- 2 x 1.5w LED Light
- Colour Temperature: 3500 K
- 1 metal grease filter cassette
- Installation: wall

Design

- Chimney hood
- Mechanical controls

Performance/technical information

- Suitable for ducted extraction and recirculation
- For recirculated extraction recirculating kit or CleanAir recirculating kit (accessory) needed
- Maximum extraction rate exhaust air 612 m^3/h according to EN 61591
- Noise level according to EN 60704-3 and EN 60704-2-13 at max. normal use exhaust air: 68 dB(A) re 1 pW
- With the Clean Air Plus recirculation kit (available as optional accessory) your appliances reaches:
- Extraction rate in recirculation mode: Max. normal use:422m^3/h
- Noise level in recirculation mode: Max. normal use:74 dB(A) re 1 pW
- Power rating: 220 W
- Light Intensity: 113 lux
- Electrical cable length 1.3 m
- Diameter pipe Ø 150 mm (Ø 120 mm enclosed)
- Dimensions exhaust air (HxWxD): 617-947 x 600 x 488 mm
- Dimensions recirculating (HxWxD): 617-1057 x 600 x 488 mm
- Dimensions recirculating with CleanAir module (HxWxD):
- 686 x 600 x 488mm - mounting with outer chimney
- 815-1145 x 600 x 488 mm - mounting with telescopic chimney
- Blower Efficiency Class: A*
- Lighting Efficiency Class: A*
- Grease Filtering Efficiency Class: B*
- Average Energy Consumption: 46.2 kWh/year*

Optional accessories

- Recirculating kit Z5915N0

* In accordance with the EU-Regulation No 65/2014

N 30, WALL-MOUNTED COOKER HOOD, 60 CM,
CLEAR GLASS
D64ABC0N0B

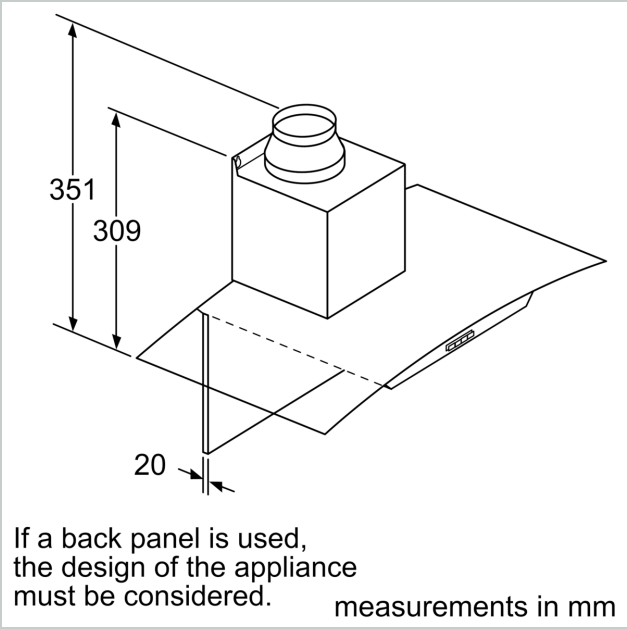

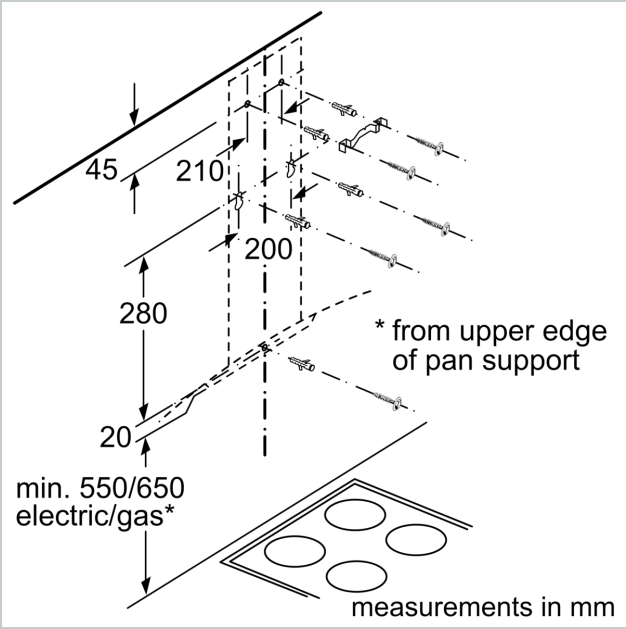

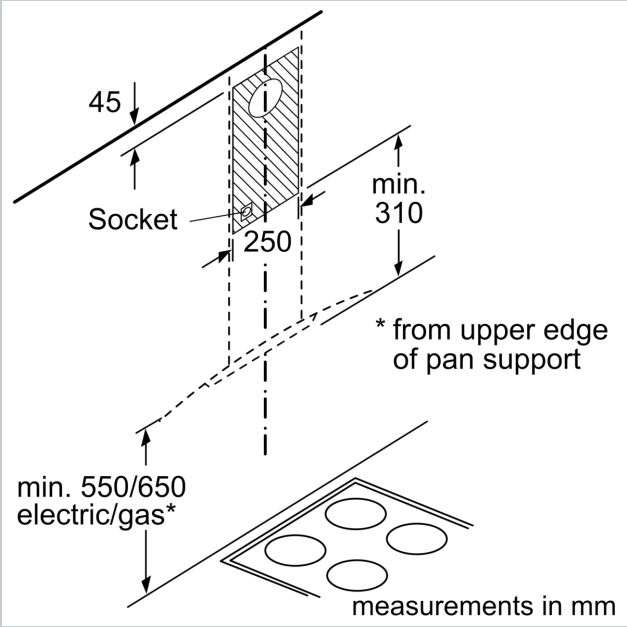

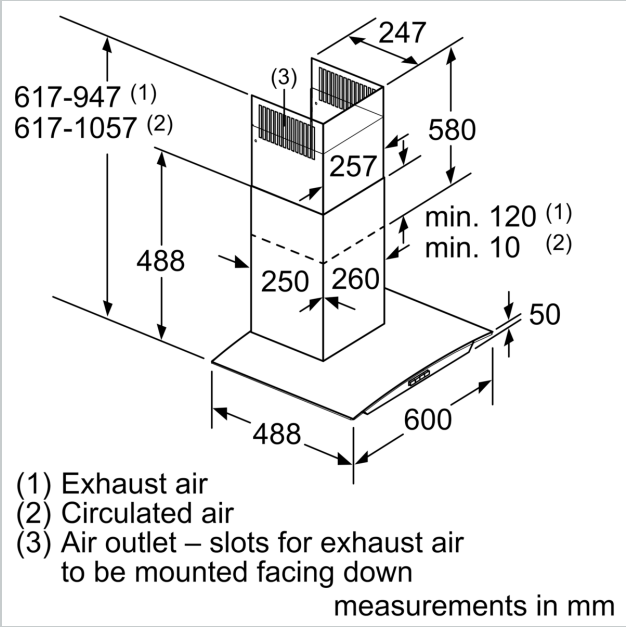

measurements in mm

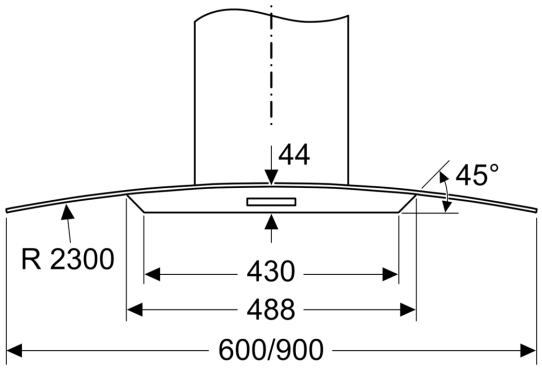

Dimensions for designing rear wall panels. Please ensure that all dimensions are within the tolerances. The actual dimensions must be checked on the appliance in question.