N 30, WALL-MOUNTED COOKER HOOD, 90 CM, STAINLESS STEEL
D92QBC0N0B

D

Our classic design hood with a modern twist - experience the slim pyramid hood.

√ LED Lighting – Clear illumination while you cook.

√ Reduced Noise: our optimised motor guarantees a quiet cooking experience.

Optional accessories

Z50XXP0X0 Long Life odor filter (replacement), Z51DXA0X0 Standard odor filter (replacement), Z51DXB1X4 Clean Air Standard odor filter (repl.), Z51DXI1X4 Clean Air Standard recirculation kit, Z51DXI1X6 Clean Air Plus recirculation kit, Z51DXU0X0 Standard recirculation kit, Z51FXC1N6 Clean Air Plus recirc. kit external, Z51FXD1N1 Long Life recirculation kit external, Z51FXJ0X0 Long Life recirculation kit, Z53XXB1X6 Clean Air Plus odor filter (replacement), Z5861N0 Back panel stainless steel, Z5895N0 Stainless steel back panel 900 mm, Z5905N0 Chimney extension 1000 mm, Z5915N0 Chimney extension 1500 mm

Features

Technical Data

Typology: ..... Wall-mounted
Length electrical supply cord: ..... 130.0 cm
Height of the chimney: ..... 582-912/582-1022 mm
Height of the appliance: ..... 94 mm
Minimum distance above an electric hob: ..... 550 mm
Minimum distance above a gas hob: ..... 650 mm
Net weight: ..... 12.7 kg
Type of control: ..... mechanical
Number of speed settings: 3
Maximum output air extraction: ..... 365 m^3/h
Maximum output recirculating air: ..... 240 m^3/h
Maximum Air flow: ..... 365 m^3/h
Number of lights: 2
Noise level: ..... 64 dB(A) re 1 pW
Diameter of air outlet: ..... 120 / 150 mm
Grease filter material: ..... Washable aluminium
EAN code: 4242004224136
Connection Rating: ..... 100 W
Fuse protection: ..... 10 A
Voltage: ..... 220-240 V
Frequency: ..... 50; 60 Hz
Plug type: ..... GB plug
Installation typology: ..... Wall-mounted

4 242004 224136

N 30, WALL-MOUNTED COOKER HOOD, 90 CM, STAINLESS STEEL
D92QBC0N0B

Features

Key performance features:

- Energy Efficiency Class: D (at a range of energy efficiency classes from A+++ to D)
- Max. extraction rate: 365 m3/h
- Noise max. Normal Level: Noise, max. speed in normal us: 64 dB dB*

Features

- Push button control operation
- 3 power levels
- 2 x 1.5w LED Light
- Colour Temperature: 3500 K
- 3 metal grease filter cassettes
- Installation: wall

Design

- Chimney hood
- Mechanical controls

Performance/technical information

- Suitable for ducted extraction and recirculation
- For recirculated extraction recirculating kit or CleanAir recirculating kit (accessory) needed
- Maximum extraction rate exhaust air 365 m^3/h according to EN 61591
- Noise level according to EN 60704-3 and EN 60704-2-13 at max. normal use exhaust air: 64 dB(A) re 1 pW
- With the Clean Air Plus recirculation kit (available as optional accessory) your appliances reaches:
- Extraction rate in recirculation mode: Max. normal use:240m^3/h
- Noise level in recirculation mode: Max. normal use:65 dB(A) re 1 pW
- Power rating: 100 W
- Light Intensity: 91 lux
- Electrical cable length 1.3 m
- Diameter pipe Ø 150 mm (Ø 120 mm enclosed)
- Dimensions exhaust air (HxWxD): 676-1006 x 900 x 500 mm
- Dimensions recirculating (HxWxD): 676-1116 x 900 x 500 mm
- Dimensions recirculating with CleanAir module (HxWxD):
- 744 x 900 x 500mm - mounting with outer chimney
- 874-1204 x 900 x 500 mm - mounting with telescopic chimney
- Blower Efficiency Class: E*
- Lighting Efficiency Class: A*
- Grease Filtering Efficiency Class: D*
- Average Energy Consumption: 53.1 kWh/year*

Optional accessories

- Recirculating kit Z50XXP0X0

* In accordance with the EU-Regulation No 65/2014

N 30, WALL-MOUNTED COOKER HOOD, 90 CM,
STAINLESS STEEL
D92QBC0N0B
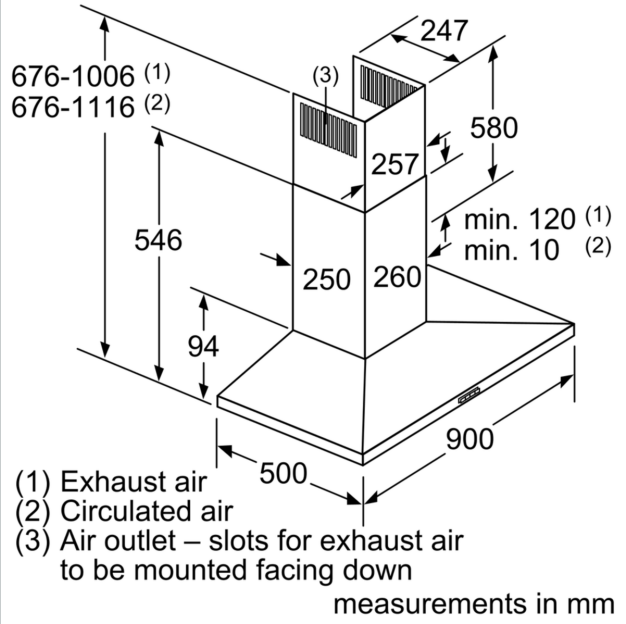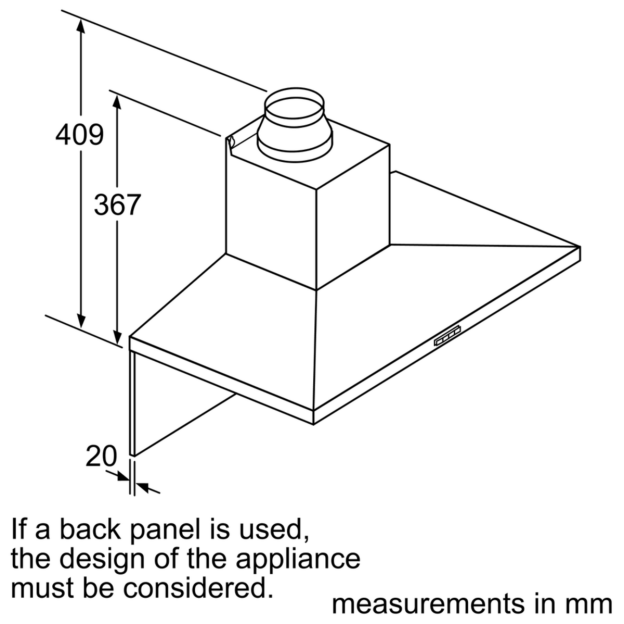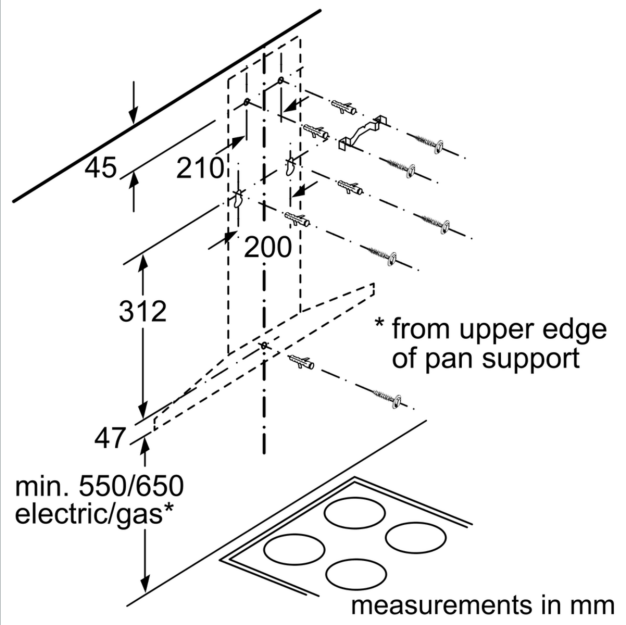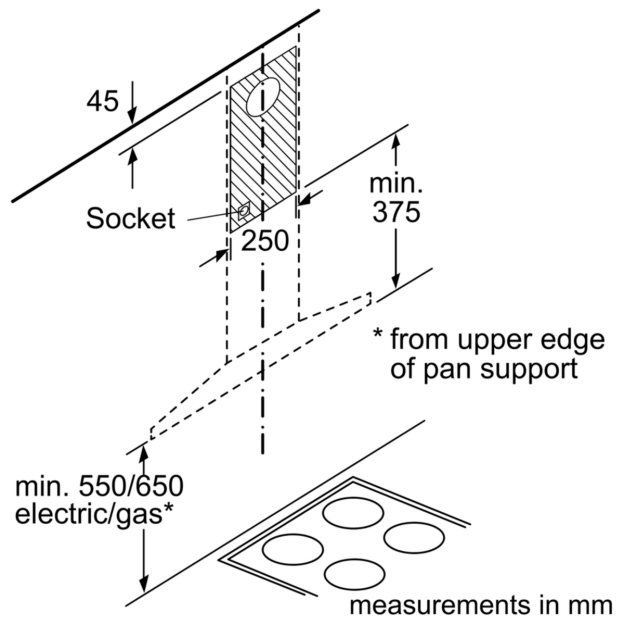
Dimensioned drawings