N 90, WALL-MOUNTED COOKER HOOD, 90 CM, CLEAR GLASS BLACK PRINTED
D96IKW1S0B

A+

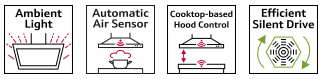

The design hood with an inclined front and high power ensures headroom while cooking.

- √ Ambient Light – Individualized lighting with endless colour shades via Home Connect.
- √ Fully Automatic Hood – Takes control as soon as you switch on the hob.
- √ Cooktop-based Hood Control – Adjust your hood´s extraction level and lighting.
- √ Efficient Drive Motor – Quiet and energy-efficient hood motor for a calmer kitchen.
- √ Touch Control: an integrated flat surface control panel for smooth operation with a fingerswipe.

Z50XXP0X0	Long Life odor filter (replacement)
Z51AIB1X6	Clean Air Plus odor filter (replacement)
Z51AII1X6	Clean Air Plus recirculation kit
Z51AIR0X0	Long Life recirculation kit (chimless)
Z51AIS0X0	Long Life recirculation kit
Z51AIV1X6	Clean Air Plus recirc. kit (chimless)
Z51AXC1N6	Clean Air Plus recirc. kit external
Z51AXK0N0	Chimney extension 1000 mm
Z51AXL0N0	Chimney extension 1500 mm
Z53XXB1X6	Clean Air Plus odor filter (replacement)
Z91AXE1S1	Chimney standard black

Typology:	Wall-mounted
Length electrical supply cord:	130.0 cm
Height of the appliance:	323 mm
Minimum distance above an electric hob:	450 mm
Minimum distance above a gas hob:	650 mm
Net weight:	25.9 kg
Type of control:	Electronic
Number of speed settings:	3-stage + 2 intensive
Maximum output air extraction:	468 m^3/h
Boost position output recirculating:	703.0 m^3/h
Maximum output recirculating air:	459 m^3/h
Boost position air extraction:	837 m^3/h
Maximum Air flow:	468 m^3/h
Number of lights:	2
Noise level:	55 dB(A) re 1pW
Diameter of air outlet:	120 / 150 mm
Grease filter material:	Washable aluminium
EAN code:	4242004209584
Connection Rating:	170 W
Fuse protection:	10 A
Voltage:	220-240 V
Frequency:	60; 50 Hz
Plug type:	GB plug
Installation typology:	Wall-mounted
Delay Shut off modes:	10 min

4 242004 209584

N 90, WALL-MOUNTED COOKER HOOD, 90 CM, CLEAR GLASS BLACK PRINTED D96IKW1S0B

Key performance features:

- Energy Efficiency Class: A+ (at a range of energy efficiency classes from A+++ to D)
- Extraction rate according to EN 61591 ø 15 cm:
- max. Normal use467m³/h
- Intensive837 m³/h
- Noise max. Normal Level: Noise, max. speed in normal us: 55 dB dB*
- Remote Monitoring and Control for connected home appliances and operation via smartphone or tablet (only in countries where Home Connect service is available)
- The Home Connect functionality can be extended by integrating numerous applications from external cooperation partners (partnerships)
- Voice Control enabled via popular voice assistants (only in countries where this service is available)

Features

- Hob-Hood control (with Wi-Fi enabled hob)
- Climate Control Sensor
- Additional functions: Ambient light RGB
- Touch control
- LED display
- 3 power levels and 2 intensive settings
- Noise reduction function
- 2 x 3w LED Light
- Colour Temperature: 3500 K
- softLight with dimmer function
- Efficient BLDC-technology
- Interval operation
- Automatic after running (Automatic after running (10 minutes))
- Automatic intensive revert (6mins)
- 2 metal grease filter cassettes
- Saturation indicator for metal and charcoal filter
- Additional noise insulation
- easy to clean Inner frame
- Installation: wall
- Rim ventilation

Design

- Chimney hood
- Electronic controls

Performance/technical information

- Suitable for ducted extraction and recirculation
- For recirculated extraction recirculating kit or CleanAir recirculating kit (accessory) needed
- Installation system: Wall fixing inclined/flat/cube
- Extraction rate according to EN 61591 max. 837 m³/h
- Noise level according to EN 60704-3 and EN 60704-2-13 at max. normal use exhaust air: 55 dB(A) re 1 pW
- Noise level according to EN 60704-3 and EN 60704-2-13 at maximum normal setting: extraction rate: 55 dB (A) re 1pW
- Extraction rate exhaust air according to EN 61591:
- max. normal use467 m³/h, intensive 837 m³/h
- Noise level according to EN 60704-3 and EN 60704-2-13 exhaust air:
- Max. normal use:55dB(A) re 1 pW
- Intensive:67 dB(A) re 1 pW
- With the Clean Air Plus recirculation kit (available as optional accessory) your appliances reaches:
- Extraction rate in recirculation mode: Max. normal use:459m³/h
- Intensive:703m³/h
- Noise level in recirculation mode with Clean Air Plus odor filter : Max. normal use:65dB(A) re 1 pW
- Intensive:77dB(A) re 1 pW
- Power rating: 170 W
- Light Intensity: 519 lux
- Electrical cable length 1.3 m
- Diameter pipe Ø 150 mm (Ø 120 mm enclosed)
- Dimensions exhaust air (HxWxD): 928-1198 x 890 x 545 mm
- Dimensions recirculating (HxWxD): 988-1258 x 890 x 545 mm
- Dimensions recirculating with CleanAir module (HxWxD):
- 1118 x 890 x 545mm - mounting with outer chimney
- 1188-1458 x 890 x 545 mm - mounting with telescopic chimney
- Blower Efficiency Class: A*
- Lighting Efficiency Class: A*
- Grease Filtering Efficiency Class: B*
- Average Energy Consumption: 31.5 kWh/year*

Optional accessories

- Recirculating kit Z50XXP0X0

* In accordance with the EU-Regulation No 65/2014

N 90, WALL-MOUNTED COOKER HOOD, 90 CM,
CLEAR GLASS BLACK PRINTED
D96IKW1S0B

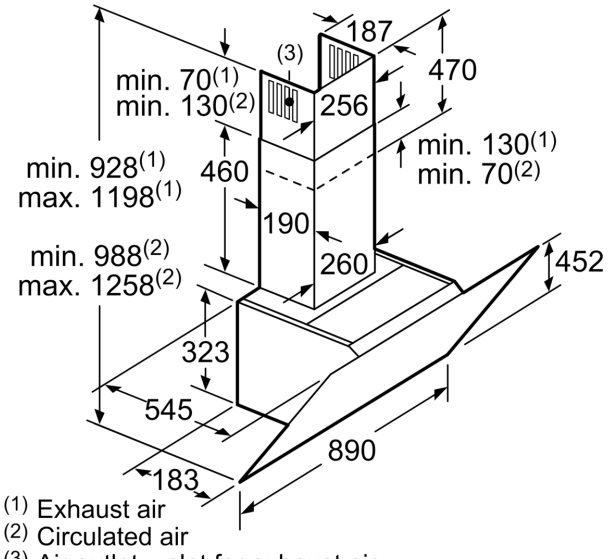

(1) Exhaust air
(2) Circulated air
(3) Air outlet – slot for exhaust air to be mounted facing down

measurements in mm

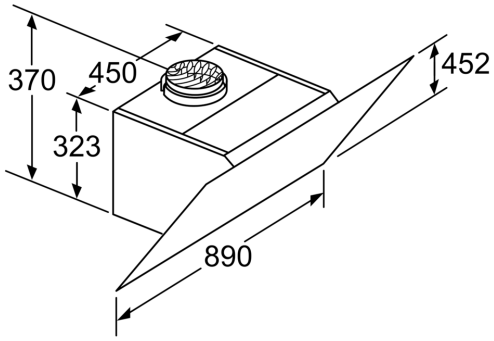

Appliance in circulated air mode without duct
Circulated air set required

measurements in mm

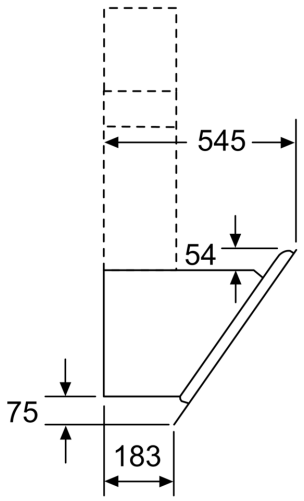

measurements in mm

Measurements in mm

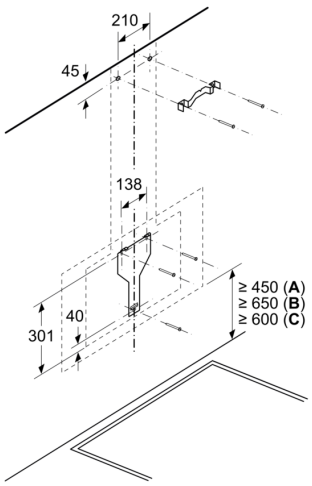

A: Electric

B: Gas - from upper edge of pan support

C: Electric - for Australia and New Zealand

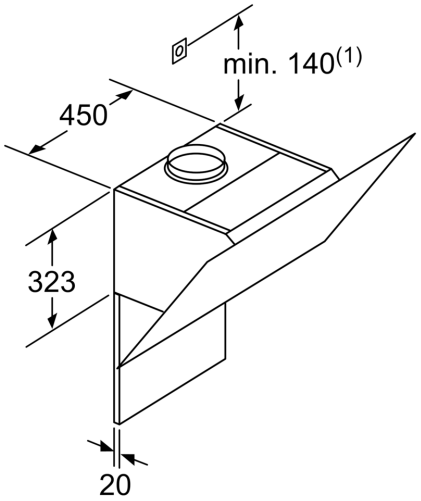

(1)Position of socket

Note the maximum thickness of the back panel.

measurements in mm

Measurements in mm

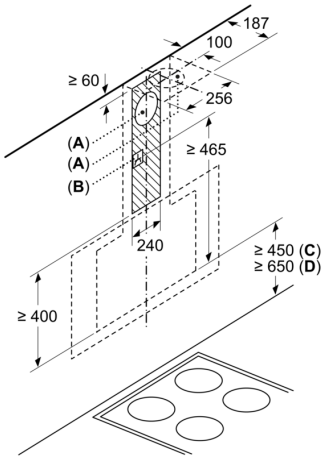

A: Exhaust air
B: Socket

From upper edge of pan support

C: Electric
D: Gas