N 30, BUILT-IN FRIDGE-FREEZER WITH FREEZER AT BOTTOM, 177.2 X 54.1 CM, SLIDING HINGE KI7861SE0G

KS6B0RZ0	Bottle Rack
KS9E0FZ0	Package Neff FlexCooling
KSGG0MZ0	Butter box

This No Frost built-in fridge-freezer with Eco Air Flow ensures ideal air circulation in the entire fridge.

- √ Fresh Safe – Fridge drawer for dedicated fresh fruit and veg storage.
- √ Our safety glass shelves happily shoulder generous loads of delicacies in your fridge

Energy Efficiency Class:	E
Average annual energy consumption in kilowatt hour per year (kWh/a):	234 kWh/a
Sum of volume of frozen compartments:	76 l
Sum of volume of chill compartments:	184 l
Airborne acoustical noise emissions :	35 dB(A) re 1pW
Airborne acoustical noise emission class:	B
Built-in / Free-standing:	Built-in
Door panel options:	Not possible
Height:	1772 mm
Width of the appliance:	541 mm
Depth:	548 mm
Required niche size for installation (HxWxD):	1775 x 560 x 550 mm
Net weight:	51.2 kg
EAN code:	4242004276371
Fuse protection:	10 A
Door hinge:	Right reversible
Voltage:	220-240 V
Frequency:	50 Hz
Length electrical supply cord:	230.0 cm
Number of compressors:	1
Number of independent cooling systems:	1
Interior ventilator:	No
Reversible Door Hinge:	Yes
Number of Adjustable Shelves in fridge compartment:	3
Shelves for Bottles:	No
Frost free system:	Freezer
Installation typology:	Full-integrated

4 242004 276371

N 30, BUILT-IN FRIDGE-FREEZER WITH FREEZER AT BOTTOM, 177.2 X 54.1 CM, SLIDING HINGE KI7861SE0G

- Built-in fridge-freezer combination
- easy Installation

Performance and Consumption
- EU19_EEK_D: E
- Total Volume : 260 l
- Annual Energy Consumption: 234 kWh/a
- EU19_Fast freezer facility_D
- Noise Level : 35 dB , EU19_Noise emission class_D: B

Functions
- Bright interior LED fridge light in fridge section

Design features
- Electronic control (LED chain)
- Super Cooling: automatic deactivation
- SuperFreeze function with automatic deactiviation
- optical and acoustical

Design features
- Net Fridge Volume : 184 l
- 4 safety glass shelves of which 3 are height adjustable
- 3 door bins

Freshness System
- 1 FreshSafe drawer- The ideal place to store your fruit and vegetables safely.

Food freshness system
- NO_FROST_NEU_BL, never have to defrost ever again
- Net Freezer Volume : 76 l
- Freezing capacity 24h : 4 kg
- Temperature rise time : EU19_Temperature rise time_D: 10 H
- 3 freezer drawers

Dimension and installation
- Dimensions: 177.2 cm H x 54.1 cm W x 54.8 cm D
- Niche Dimensions: 177.5 cm H x 56 cm W x 55 cm D

Key features - Fridge section
- Right hinged door, reversible
- 220 - 240 V
- Climate Class: SN-ST
- Length of power cord:230 cm

Key features - Freezer section
- 1 x ice cube tray

Country Specific Options
- Based on the results of the standard 24-hour test. Actual consumption depends on usage/position of the appliance.
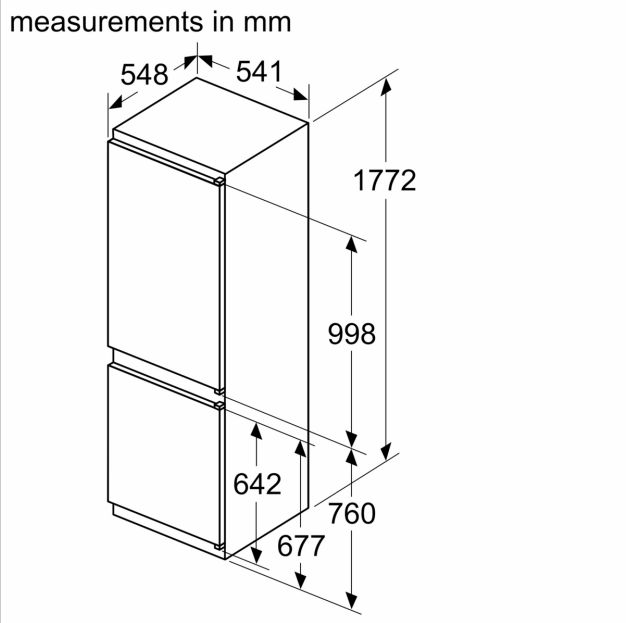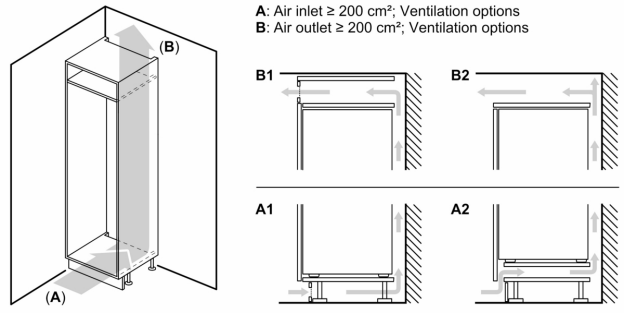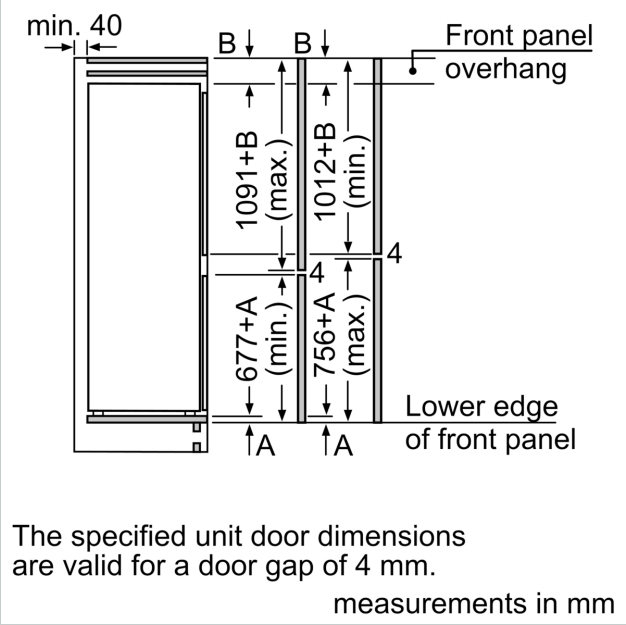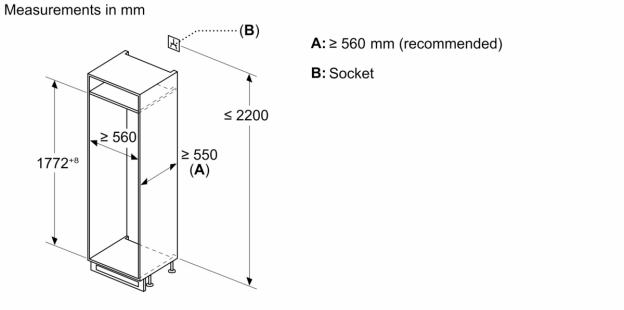
N 30, BUILT-IN FRIDGE-FREEZER WITH FREEZER AT BOTTOM, 177.2 X 54.1 CM, SLIDING HINGE
KI7861SE0G