N 90, BUILT-IN WARMING DRAWER, 60 X 14 CM, STAINLESS STEEL
N17HH10N0B

Z11SZ60X0	SeamlessCombination 45 + 14cm

A 14cm high warming drawer that can link with a 45cm compact oven to fit perfectly into the 60 cm oven niche.

- √ Push & Pull – One gentle touch opens and closes your drawer.
- √ Installation with compact appliance – combine your drawer with any 45 cm appliance

Built-in / Free-standing: ..... Built-in
Maximum number of plates: 12
Maximum number of espresso cups: 64
Dimensions: ..... 140x596x548 mm
Dimensions of the packed product (HxWxD): . 210 x 660 x 660 mm
Min. required niche size for installation (HxWxD): .140 x 560 x 550 mm
EAN code: 4242004184584
Fuse protection: .....10 A
Voltage: .....220-240 V
Frequency: .....60; 50 Hz
Plug type: ..... GB plug

4 242004 184584

N 90, BUILT-IN WARMING DRAWER, 60 X 14 CM, STAINLESS STEEL
N17HH10N0B

Design
- Can accommodate up to:
- -12plates
- -64 espresso cups
- Temperature control in 4 levels: ca. 30°C - 80°C (glass surface temperature)
- Easy to clean toughened glass heating plate
- Elongated designed dials
- Push-Pull opening mechanism

Programmes/functions
- 5 functions: dough proving thawing of delicate foods keeping drinks and food warm pre-warming of crockery gentle cooking

Technical information
- Cavity volume: 20 l
- Loading up to 25 kg
- Power cord length 150 cm Cable length
- Appliance dimension (hxwxd): 140 mm x 596 mm x 548 mm
- Niche dimension (hxwxd): 140 mm x 560 mm - 568 mm x 550 mm
- Total connected load electric: 0.81 KW
- Please refer to the dimensions provided in the installation manual

N 90, BUILT-IN WARMING DRAWER, 60 X 14 CM,
STAINLESS STEEL
N17HH10N0B

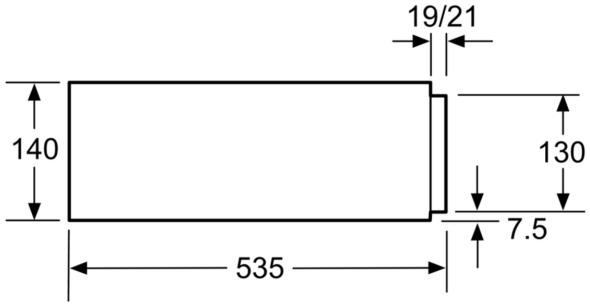

Compact ovens with an appliance height of 455 mm can be installed above a warming drawer.
An intermediate floor is not required.

measurements in mm

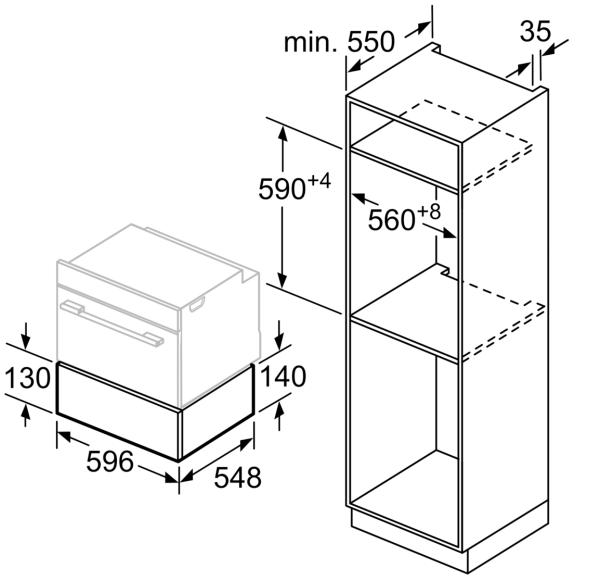

measurements in mm